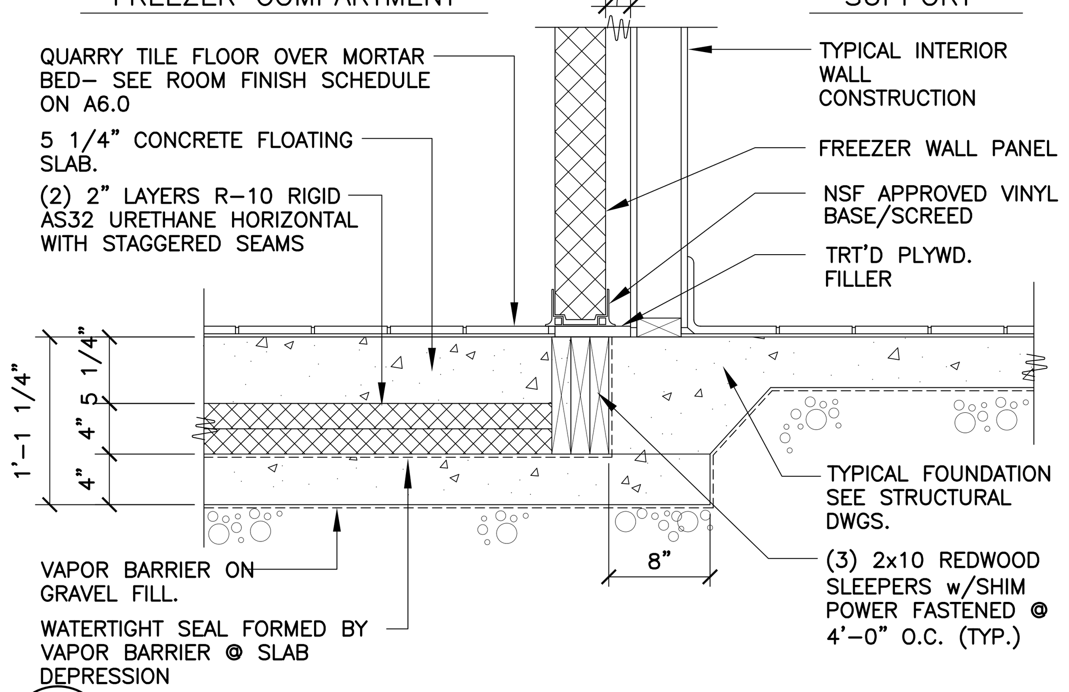

2 / A6.0 FREEZER FLOOR DETAIL @ INT. WALL
1"=1'–0"

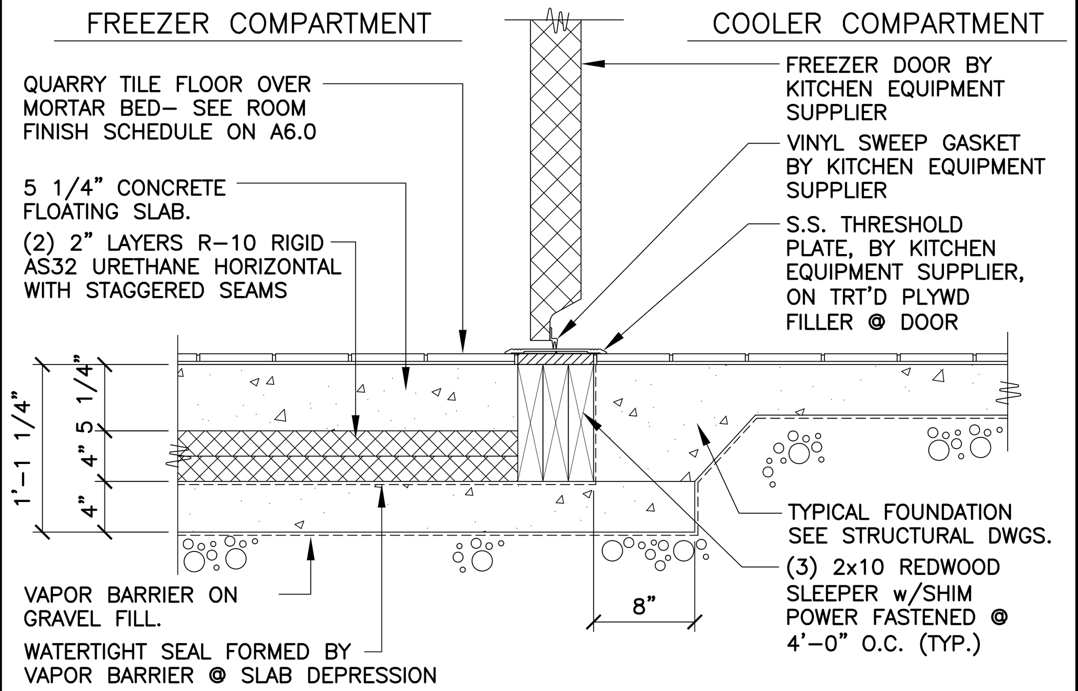

3 / A6.0 FREEZER FLOOR DETAIL @ DOOR
1"=1'–0"

FRAME TYPES

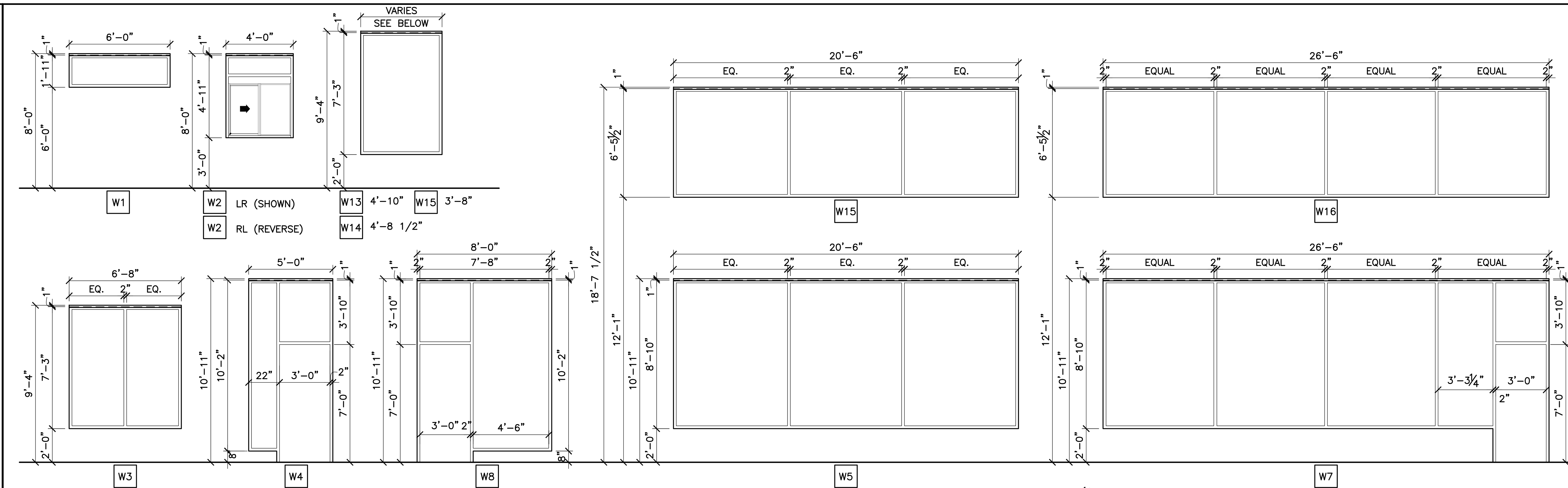

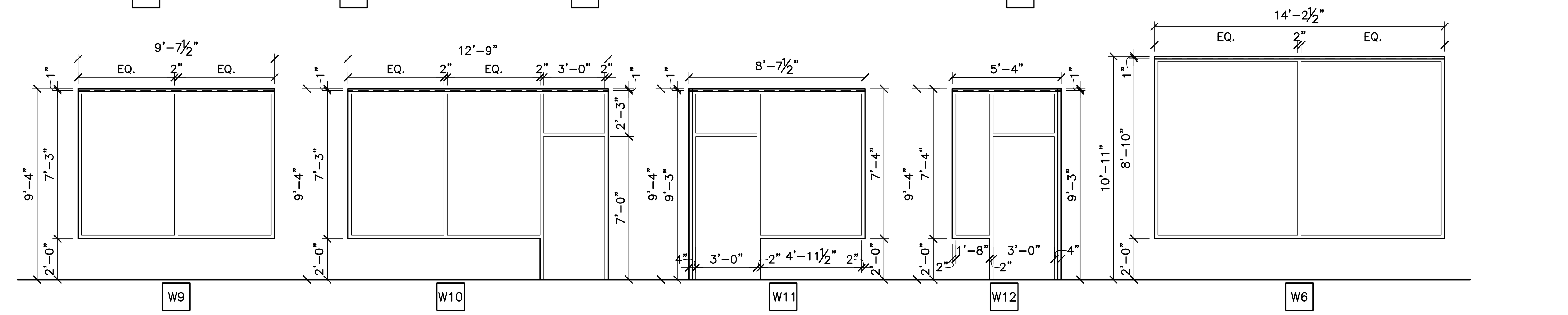

EXTERIOR WINDOW ASSEMBLY
(STOREFRONT & ENTRANCE SYSTEM)
FOR GLAZING & FRAME REQUIREMENTS: SEE EXTERIOR WINDOW ASSEMBLY, 4/A5.0

INTERIOR WINDOW ASSEMBLY
(STOREFRONT & ENTRANCE SYSTEM)
1. EXTRA DARK BRONZE ALUMINUM FRAME, THERMALLY BROKEN WITH HEAD RECEIVER CHANNEL.
2. 1/4" CLEAR TEMPERED GLAZING
3. 1/2" CORIAN SILL EACH SIDE

DOOR HARDWARE

GENERAL NOTES:
1. ALL EXIT DOORS SHALL BE KEYLESS IN THE DIRECTION OF EGRESS.
2. THE OPENING FORCE OF ALL EXT. PUSH/PULL DOORS SHALL NOT EXCEED 8 1/2 LBS.
3. THE OPENING FORCE OF ALL INTERIOR PUSH/PULL DOORS SHALL NOT EXCEED 5 LBS.
4. PROVIDE PANIC HARDWARE FOR ALL EXTERIOR DOORS AS NOTED ON THE DOOR SCHEDULE.
5. ALL DOOR HARDWARE SHALL NOT REQUIRE TIGHT GRASPING, TIGHT PINCHING OR TWISTING OF THE WRIST TO OPERATE.

DOOR #1 &#1A – ENTRY DOOR/EMERGENCY EXIT
1. 1 EA CLOSER LCN 4021 x 18
2. 3 EA HINGES OFFSET PIVOT ANSI –A–156.4 GRADE 1; PROVIDE EXPOSED PARTS OF CAST ALUMINUM ALLOY, AS SUPPLIED BY DOOR MANUFACTURER.
3. 1 EA (DOOR #1 ONLY) PULL HANDLE ROCKWOOD MFG. MODEL: RM3301. SIZE: 1–1/4" DIA. CTC: 5'–10". FINISH: CLEAR ANODIZED ALUM. OFFSET MOUNTING: TYPE 1XHD – THRU BOLT HEAVY DUTY
4. 1 EA PANIC HARDWARE ADAMS RITE MFG. CO. 8800 SERIES WITH OUTSIDE CYLINDER (FINISH TO MATCH STOREFRONT DOOR)
5. 1 EA THRESHOLD NATIONAL GUARD PRODUCTS, INC. SADDLE TYPE THRESHOLD 325, 36" WIDE x 1/2" RISE (ADA ACCESSIBLE).
6. 1 EA WEATHER STRIPPING: PROVIDE COMPRESSION WEATHER STRIPPING AGAINST FIXED STOPS. AT OTHER EDGES PROVIDE SLIDING WEATHER STRIPPING RETAINED IN ADJUSTABLE STRIP MORTISED INTO DOOR EDGE. PROVIDE EPDM OR VINYL GASKET WEATHER STRIPPING IN BOTTOM DOOR RAIL ADJUSTABLE FOR CONTACT W/ THRESHOLD.
7. 1 EA SIGN MOUNT ONTO DOOR, TO READ "THIS DOOR MUST REMAIN UNLOCKED WHENEVER THE BUILDING IS OCCUPIED/DURING BUSINESS HOURS."

DOOR #2 – VESTIBULE
1. 1 EA CLOSER LCN 4041 x 18
2. 3 EA HINGES OFFSET PIVOT ANSI –A–156.4 GRADE 1; BY DOOR MANUFACTURER.
3. 1 EA PUSH/PULL HANDLE HAGER PUSH/PULL SET 164D/V/B.

DOOR #3 – STORAGE DELIVERY
1. 1 EA HINGE 780–112HD 83" ALUM HAGER
2. 1 EA CLOSER 4111 H–CUSH ALUM LCN
3. 1 EA PANIC 9975EO–LD 48" SP28 V.DUPRIN
4. 1 EA TRIM 990DT US26D V.DUPRIN
5. 1 EA EXIT ALARM EAX2500 FLUSH DETEX
6. 1 EA LOCKGUARD CLP110 US32D DON–JO
7. 1 EA TREADPLATE 24 X 46 UMCO
8. 1 EA WTH/STP160V 48 X 84 N.GUARD
9. 1 EA THRESHOLD 325HD 48" N.GUARD
10. 1 EA SWEEP 101VA 48" N.GUARD
11. 1 EA VIEW FRAME LVGLFMD 9 X 9 DKB W/FLAP ON INSIDE N.GUARD

DOOR #3A – FREEZER DELIVERY
1. 1 EA HINGE780–112HD 83" ALUM HAGER
2. 1 EA DEADBOLT B661P 626 SCHLAGE
3. 1 EA PULL H3E US28 HAGER
4. 1 EA LOCKGUARD CLP110 US32D DON–JO
5. 1 EA TREADPLATE 24 X 46 UMCO
6. 1 EA WTH/STP 160V 48 X 84 N.GUARD
7. 1 EA THRESHOLD 325HD 48" N.GUARD
8. 1 EA SWEEP 101VA 48" N.GUARD

DOOR #4 – REAR EXIT (& ROOF ACCESS EXIT)
1. 1 EA HINGE 780–112HD 83" ALUM HAGER
2. 1 EA CLOSER 4111 H–CUSH ALUM LCN
3. 1 EA PANIC 9975EO–LD 48" SP28 V.DUPRIN
4. 1 EA TRIM 990DT US26D V.DUPRIN
5. 1 EA EXIT ALARM EAX2500 FLUSH DETEX
6. 1 EA LOCKGUARD CLP110 US32D DON–JO
7. 1 EA TREADPLATE 24 X 34 UMCO
8. 1 EA WTH/STP160V 36 X 84 N.GUARD
9. 1 EA THRESHOLD 325HD 48" N.GUARD
10. 1 EA SWEEP 101VA 36" N.GUARD
11. 1 EA VIEW FRAME LVGLFMD 9 X 9 DKB W/FLAP ON INSIDE N.GUARD

DOOR #5 – RESTROOM ENTRY
1. 3 EA HINGE BB1279 4 ½ X 4 ½ US26D HAGER
2. 1 EA CLOSER LDPA4031 SNB ALUM LCN
3. 1 EA PUSH PLATE 30S 4 X 32 US32D 40"AFF MOUNTED TO CENTER OF PLATE
4. 1 EA PULL PLATE LADDER PULL HANDLE WITH DECORATIVE FIXING, 32"L 1"DIA #S–32–1000 – UMCO 32D. 40" AFF MOUNTED CENTER OF PULL
ALT. OPTION: 1 EA PULLPLATE SANITGRASP
5. 2 EA KICKPLATE 190S 8 X 34 US32D HAGER
6. 1 EA DOOR STOP 236W US32D HAGER
7. 1 EA FINGER GRD MKIA PUSH SIDE BRN F.SAFE
8. 1 EA FINGER GRD MKIB PULL SIDE BRN F.SAFE
9. 1 EA STEPNPULL PULL SIDE (OPTIONAL)

DOOR #6 – ADA STALL
1. 2 EA HINGE 1250 4 ½ X 4 ½ US26D HAGER
2. 1 EA HINGE BB1279 4 ½ X 4 ½ US26D HAGER
3. 1 EA DEADBOLT B571 X 10–087 214EE X 12 X 291 X 626
4. 2 EA BACK TO BACK LADDER PULL HANDLE, 16"L, 1"DIA #S–16–1000 BTB–UMCO 32D MOUNTED 6" FROM EDGE OF DOOR TO CENTER OF SCREWS – 28½" MOUNTED 28½" FROM TOP OF DOOR TO C/L OF PULL
5. 1 EA ROBE HOOK 917 BRADLEY
6. 1 EA DOOR STOP 236W US32D HAGER

DOOR #6A – STANDARD STALL
1. 2 EA HINGE 1250 4 ½ X 4 ½ US26D HAGER
2. 1 EA HINGE BB1279 4 ½ X 4 ½ US26D HAGER
3. 1 EA DEADBOLT B571 X 10–087 214EE X 12 X 291 X 626
4. 2 EA BACK TO BACK LADDER PULL HANDLE, 16"L, 1"DIA #S–16–1000 BTB–UMCO 32D MOUNTED 6" FROM EDGE OF DOOR TO CENTER OF SCREWS – 28½" MOUNTED 28½" FROM TOP OF DOOR TO C/L OF PULL
5. 1 EA ROBE HOOK 917 BRADLEY
6. 1 EA DOOR STOP 236W US32D HAGER

DOOR #7 – DINING ROOM JANITORS CLOSET
1. 3 EA HINGE BB1279 4 ½ X 4 ½ US26D HAGER
2. 1 EA LOCK ND80PD RHO 626 SCHLAGE

DOOR #8 – COMPUTER CLOSET
1. 4 EA HINGE BB1279 4 ½ X 4 ½ US26D HAGER
2. 1 EA LOCK ND80PD RHO 626 SCHLAGE
3. 1 EA LOUVER L700RX DKB 12 X 18 N.GUARD

DOOR #8A – COMPUTER CLOSET
1. 8 EA HINGE BB1279 4 ½ X 4 ½ US26D HAGER
2. 1 EA LOCK ND80PD RHO 626 SCHLAGE
3. 2 EA FLUSH BOLT 283D US26D HAGER

DOOR #9 – COOLER
1. ALL DOOR HARDWARE FOR THE REFRIGERATED COOLER / FREEZER SHALL BE PROVIDED BY THE MANUFACTURER.
MANUFACTURER: KOLPAK @ HY 641 N. McCORKLE PARK ROAD
PARSONS, TN 38363 PHONE: 800–344–4675
HARDWARE PROVIDED:
1. MAGNETIC PERIMETER DOOR GASKET
2. THRESHOLD REINFORCED PLASTIC (FRP)
3. POSI–SEAL DOOR CLOSURE
4. STATIONARY CHROME DOOR PULL HANDLE
5. INTERIOR SAFETY RELEASE HANDLE
6. HINGES – BRUSHED CHROME CAST ALLOY

DOOR #10 – CREW
1. 1 EA HINGE 780–112HD 83" ALUM HAGER
2. 1 EA CLOSER 1461 RW/PA ALUM LCN
3. 1 EA LOCK ND80PD RHO 626 SCHLAGE
4. 1 EA ELEC STRIKE 6211 24V DC FSE US32D SCHLAGE
5. 1 EA PWR SUPPLY PS902 SCHLAGE
6. 1 EA DOOR BELL BSV–24P SURFACE MOUNTED
7. 3 EA PUSH BUTTON 621–RD–DA HDP 626 SCHLAGE
8. 1 EA TREADPLATE 24 X 34 UMCO
9. 1 EA VIEW FRAME LFRA100 6 X 27 DKB N.GUARD
10. 1 EA GLASS 5 X 26 X ¼ UMCO

DOOR #11 PLAYPLACE RESTROOM
1. 3 EA HINGE BB1279 4 ½ X 4 ½ US26D HAGER
2. 1 EA CLOSER LDPA4031 SNB ALUM LCN
3. 1 EA LOCK ND40S RHO 626 SCHLAGE
4. 2 EA KICKPLATE 190S 8 X 34 US28 HAGER
5. 1 EA DOOR STOP 236W US32D HAGER
6. 2 EA TOE GUARD 202NA 36" N.GUARD
7. 1 EA FINGER GRD MKIA PUSH SIDE BRN F.SAFE
8. 1 EA FINGER GRD MKIB PULL SIDE BRN F.SAFE

DOOR #12 (EMERGENCY EXIT ONLY) – PLAYPLACE EMERGENCY EXIT
1. 1 EA CLOSER: LCN 4041 x 18
2. 3 EA HINGES: OFFSET PIVOT SET. GRADE 1 CAST ALUMINUM ALLOY AS SUPPLIED BY DOOR MANUFACTURER.
3. 1 EA PANIC HARDWARE ADAMS RITE MFG. CO. 8800 SERIES (EXIT ONLY) (FINISH TO MATCH STOREFRONT DOOR)
4. 1 EA THRESHOLD NATIONAL GUARD PRODUCTS, INC. SADDLE TYPE THRESHOLD 325, 36" WIDE x 1/2" RISE (ADA ACCESSIBLE).
5. 1 EA WEATHER STRIPPING: PROVIDE COMPRESSION WEATHER STRIPPING AGAINST FIXED STOPS. AT OTHER AGAINST FIXED EDGES PROVIDE SLIDING WEATHER STRIPPING RETAINED IN STOPS. AT OTHER EDGES PROVIDE SLIDING WEATHER STRIPPING RETAINED IN ADJUSTABLE STRIP MORTISED INTO DOOR EDGE. PROVIDE EPDM OR VINYL GASKET WEATHER STRIPPING IN BOTTOM DOOR RAIL ADJUSTABLE FOR CONTACT W/THRESHOLD.
6. 1 EA ALARM DETEX MODEL NO. EAX–500

DOOR #14 (NOT USED) MANAGERS OFFICE
1. 3 EA HINGE BB1279 4 ½ X 4 ½ US26D HAGER
2. 1 EA LOCK ND53PD RHO 626 SCHLAGE
3. 1 EA VIEW FRAME LFRA100 24 X 30 DKB N.GUARD
4. 1 EA GLASS 23 X 29 X ¼ CLEAR UMCO

DOOR #15 CO2
1. 1 EA HINGE 780–112HD 83" ALUM HAGER
2. 1 EA LOCK ND80PD RHO 626 SCHLAGE
3. 1 EA LOCK GUARD CLP110 US32D DON JO
4. 1 EA WTH/STP 160V 36 X 84 N.GUARD
5. 1 EA THRESHOLD 425E 36" N.GUARD
6. 1 EA SWEEP 101VA 36" N.GUARD
7. 1 EA SEC. LOUVER LVRSG–3 DKB 18 X 18 N.GUARD

DOOR #16 (NOT USED) CREW ROOM
1. 3 EA HINGE BB1279 4 ½ X 4 ½ US26D HAGER
2. 1 EA LOCK ND10S RHO 626 SCHLAGE
3. 1 EA VIEW FRAME LFRA100 24 X 30 DKB N.GUARD
4. 1 EA GLASS 23 X 29 X ¼ CLEAR UMCO

DOOR #17 – ROOF ACCESS ROOM
1. 1 EA HINGE 780–112HD 83" ALUM HAGER
2. 1 EA CLOSER 4111 H–CUSH ALUM LCN
3. 1 EA PANIC 9975EO–LD 48" SP28 V.DUPRIN
4. 1 EA TRIM 990DT US26D V.DUPRIN
5. 1 EA EXIT ALARM EAX2500 FLUSH DETEX
6. 1 EA LOCKGUARD CLP110 US32D DON–JO
7. 1 EA TREADPLATE 24 X 34 UMCO
8. 1 EA WTH/STP160V 36 X 84 N.GUARD
9. 1 EA THRESHOLD 325HD 48" N.GUARD
10. 1 EA SWEEP 101VA 36" N.GUARD
11. 1 EA VIEW FRAME LVGLFMD 9 X 9 DKB W/FLAP ON INSIDE N.GUARD

DOOR #18 – OVERHEAD DOOR
COMPLETE OPERATING LOW CLEARANCE GARAGE DOOR SYSTEM – SUPPLIED & INSTALLED BY G.C.

DOOR SCHEDULE

MARK	DOOR			FRAME	
	MATERIAL	SIZE	TYPE	MATL	SIZE
1	ALUM.	3'–0"x7'–0"x1 3/4"	A	ALUM.	(NOTE 5)
1A	ALUM.	3'–0"x7'–0"x1 3/4"	A	ALUM.	(NOTE 5)
2	ALUM.	3'–0"x7'–0"x1 3/4"	A	ALUM.	(NOTE 5)
3	H.M.	4'–0"x7'–0"x1 3/4"	B	H.M.	2"JAMB 4"HD
3A	H.M.	4'–0"x7'–0"x1 3/4"	C	H.M.	2"JAMB 4"HD
4	H.M.	3'–0"x7'–0"x1 3/4"	B	H.M.	2"JAMB 4"HD
5	S.C. WOOD W/ LAM.	3'–0"x6'–8"x1 3/4"	C	H.M.	2"JAMB & HEAD
6	S.C. WOOD W/ LAM.	3'–0"x4'–8"x1 3/4"	D	H.M.	2"JAMB & HEAD
6A	S.C. WOOD W/ LAM.	2'–6"x4'–8"x1 3/4"	D	H.M.	2"JAMB & HEAD
7	S.C. WOOD W/ LAM.	3'–0"x6'–8"x1 3/4"	C	H.M.	2"JAMB & HEAD
8	S.C. WOOD W/ LAM.	2'–0"x8'–0"x1 3/4"	C	H.M.	2"JAMB & HEAD
8A	S.C. WOOD W/ LAM.	(2) 1'–0"x8'–0"x1 3/4"	E	H.M.	2"JAMB & HEAD
9	INSULATED METAL	3'–0"x6'–6"x4"	C	N/A	N/A
10	H.M.	3'–0"x7'–0"x1 3/4"	F	H.M.	2"JAMB 4"HD
11	S.C. WOOD W/ LAM.	3'–0"x6'–8"x1 3/4"	C	H.M.	2"JAMB & HEAD
12	ALUM.	3'–0"x7'–0"x1 3/4"	A	ALUM.	(NOTE 5)
13		NOT USED			
14	S.C. WOOD W/ LAM.	3'–0"x6'–8"x1 3/4"	H	H.M.	2"JAMB & HEAD (NOT USED)
15	H.M.	3'–0"x7'–0"x1 3/4"	G	H.M.	2"JAMB 4"HD
16	S.C. WOOD W/ LAM.	3'–0"x6'–8"x1 3/4"	H	H.M.	2"JAMB & HEAD (NOT USED)
17	H.M.	4'–0"x7'–0"x1 3/4"	B	H.M.	2"JAMB 4"HD
18	O.H.	12'–0" W x 9'–0" H	N/A	N/A	N/A

GENERAL DOOR NOTES:
1. GC TO INSTALL ACCESSIBILITY DOOR SIGNS WHERE REQ'D BY LOCAL CODES – SEE GENERAL NOTE 6, SHEET A1.0
2. DETEX ALARM CONTACT SWITCHES SHALL BE RECESSED INTO THE TOP OF THE DOOR & HOLLOW METAL FRAME ABOVE.
3. DOORS, DOOR FRAMES, & HARDWARE FOR DOORS 3, 3A, 4, 5, 6, 6A, 7, 8, 8A, 10, 11, 14, 15, 16 SUPPLIED BY: UNIVERSAL MANUFACTURING 1–800–821–1414.
4. DOOR 9 SUPPLIED BY FREEZER/COOLER MANUFACTURER
5. SEE ELEVATIONS AND WALL SECTIONS
6. ALL INTERIOR SOLID CORE WOOD DOORS TO HAVE A LAMINATED FINISH, AS INDICATED PER DECOR DWGS
7. DOOR 8 & 8A – LAMINATED FINISH – "WILSONART DOVE GREY" D92–60
8. DOOR 3, 3A, 4, 15, & 17 TO HAVE MAXIMUM U VALUE = 0.37
9. DOOR 18 TO HAVE MAXIMUM U VALUE = 0.50

1 / A6.0 NOT USED

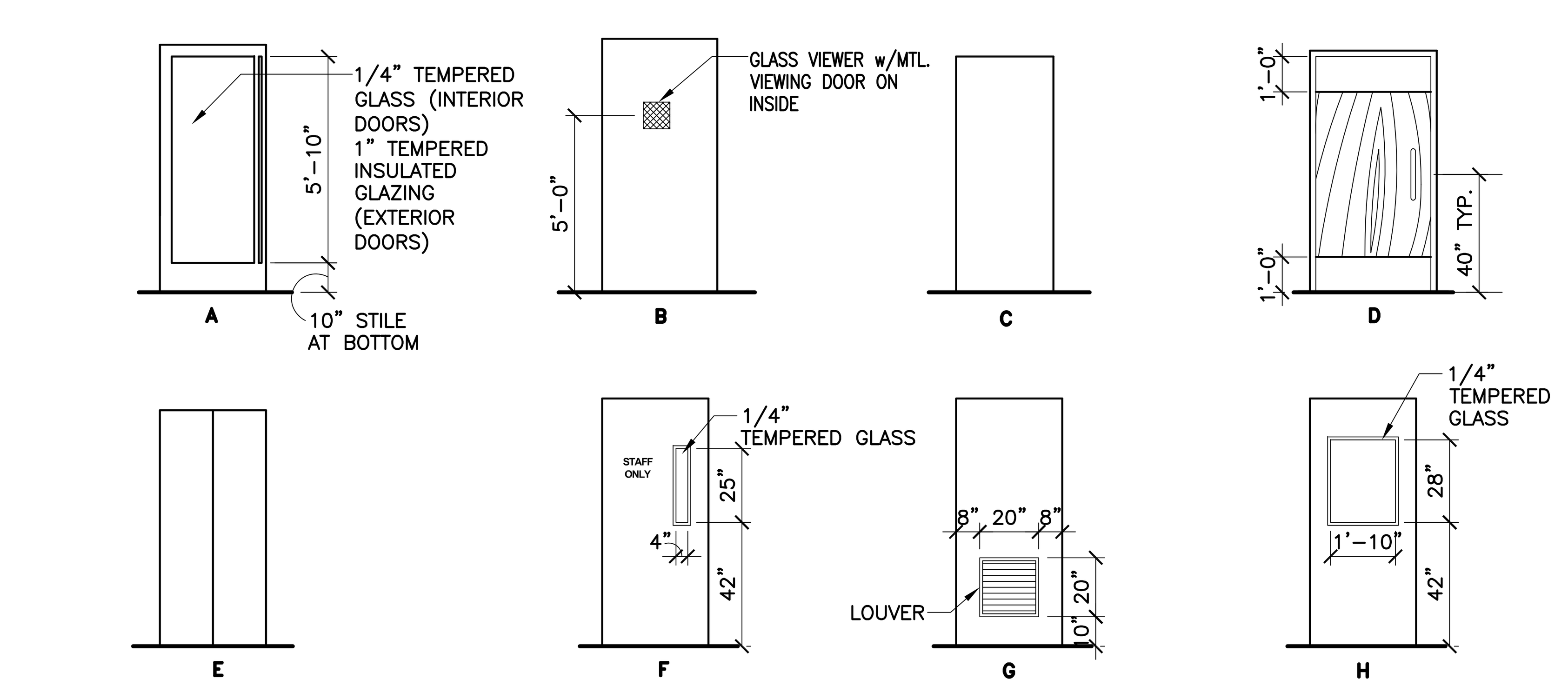

DOOR TYPES

REV	DATE	DESCRIPTION	BY
	02/22/19	PERMIT SET	DIA
	10/15/18	USRD PROGRESS SET REVIEW	DIA

I hereby certify that this plan, specification or report was prepared by me or under my direct supervision and that I am a duly registered ARCHITECT under the laws of the State of IOWA.
BRIAN R. JOHNSON 05312 — LICENSED ARCHITECT — IOWA
Signature
02/22/2019 Date
05312 Registration Number
EXPIRES 6/30/2020

PREPARED BY:
reprise DESIGN
Architecture, Inc.
ARCHITECTURE & PLANNING
12400 PORTLAND AVENUE SOUTH, SUITE 100
BURNSVILLE, MN 55337
EMAIL: DATA@REPRISEDESIGN.COM
PHONE: (952) 252–4042
FAX: (952) 252–4043

PREPARED FOR:
McDonald's USA, LLC

©2018 McDonald's USA, LLC
These drawings and specifications are the confidential and proprietary property of McDonald's USA, LLC and shall not be copied or reproduced without written authorization. The contract documents were prepared for use on this specific site in conjunction with its issue date and are not suitable for use on a different site or at a later time. Use of these drawings for reference or example on another project requires the services of properly licensed architects and engineers. Reproduction of the contract documents for reuse on another project is not authorized.

DRAWN BY: DIA
STD ISSUE DATE: 2018_09
REVIEWED BY: KD
DATE ISSUED: 02/22/2019
RD#18190

TITLE: 2018 STANDARD BUILDING – BB20
45114–(–F5)–PP–TE–WOOD/WOOD
DESCRIPTION:
WOOD BEARING WALLS W/4" BRICK EXTERIOR FINISH & Ci
WOOD ROOF TRUSS FRAMING
ACM ALPOLIC/BATTEN/METAL PANEL/BRICK EXTERIOR FINISH
SITE ID: 14–0069
SITE ADDRESS: 1227 SOUTH MARSHALL STREET BOONE, IA

SHEET NO. 014–0069.00.0
A6.0
DOOR & HARDWARE

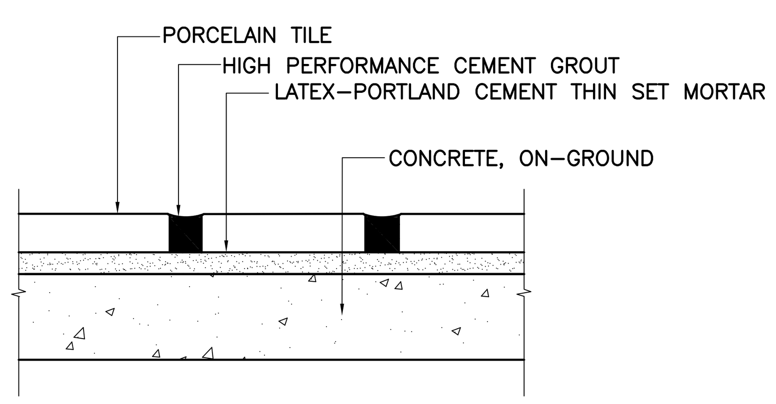

1 A6.1 RESTROOM FLOORS OVER CONCRETE
N.T.S.

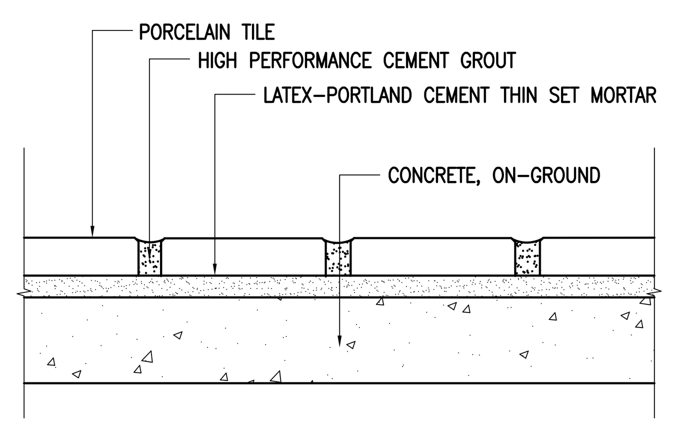

2 A6.1 DINING ROOM FLOORS OVER CONCRETE
N.T.S.

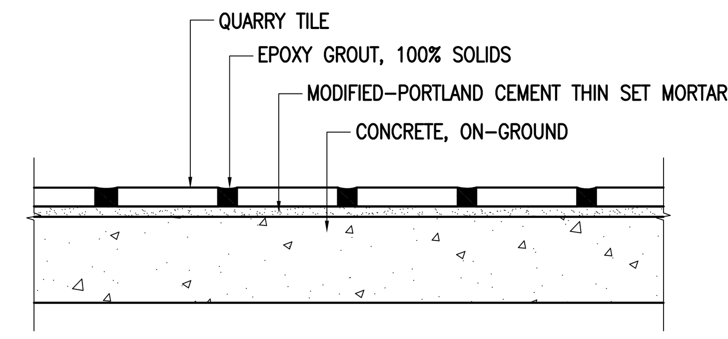

3 A6.1 KITCHEN/SUPPORT FLOORS OVER CONCRETE
N.T.S.

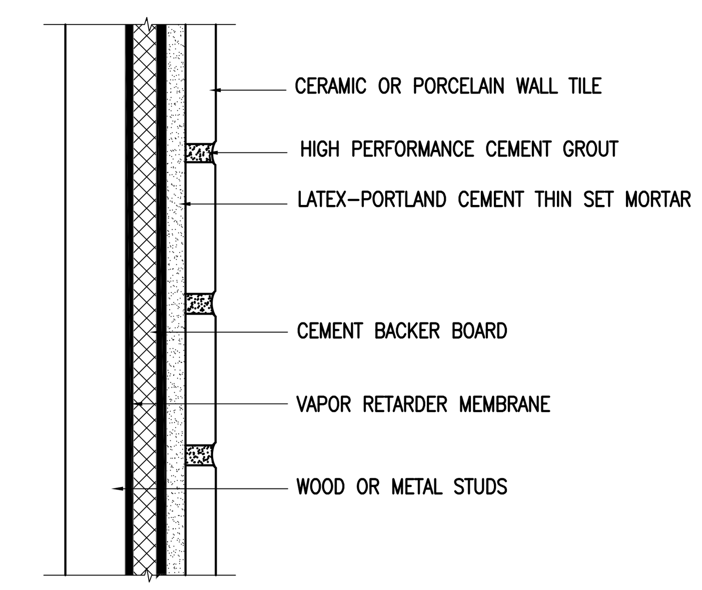

4 A6.1 DINING ROOM INTERIOR WALLS OVER WOOD OR METAL STUDS
N.T.S.

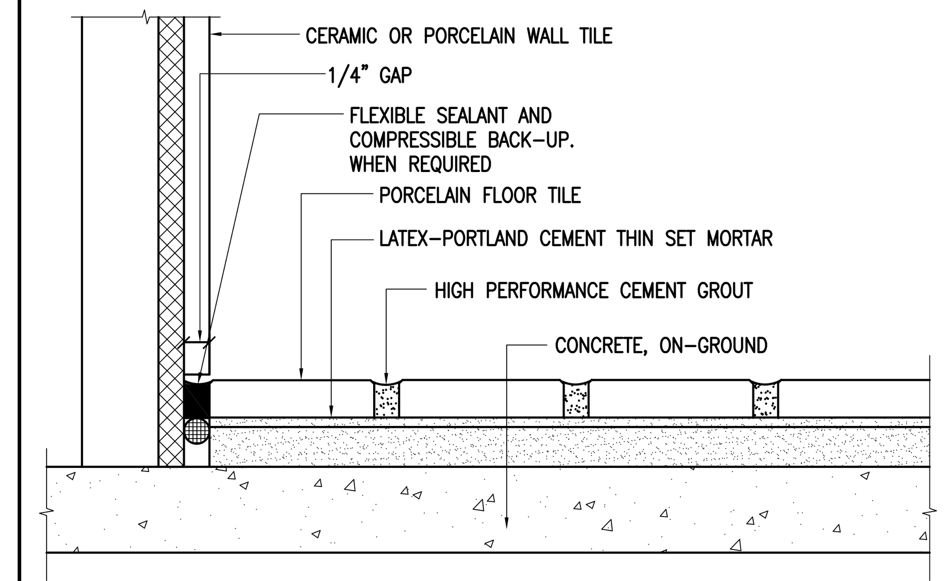

5 A6.1 DINING ROOM PERIMETER JOINT
N.T.S.

WALL TILE SCHEDULE

MARK	ROOM NAME	WALL		MORTAR SETTING BED	GROUT
100	CUSTOMER SERVICE	CERAMIC OR PORCELAIN WALL TILE	(NOTE 4C)	LATEX–PORTLAND CEMENT THIN SET (MEDIUM BED)	HIGH PERFORMANCE CEMENT GROUT
101	DINING	CERAMIC OR PORCELAIN WALL TILE	(NOTE 4B & 4C)	LATEX–PORTLAND CEMENT THIN SET (MEDIUM BED)	HIGH PERFORMANCE CEMENT GROUT
102	WOMEN'S TOILET	CERAMIC OR PORCELAIN WALL TILE	(NOTE 4B)	LATEX–PORTLAND CEMENT THIN SET (MEDIUM BED)	HIGH PERFORMANCE CEMENT GROUT
103	MEN'S TOILET	CERAMIC OR PORCELAIN WALL TILE	(NOTE 4B)	LATEX–PORTLAND CEMENT THIN SET (MEDIUM BED)	HIGH PERFORMANCE CEMENT GROUT
104	SUPPORT	N/A – SEE ROOM FINISH SCHEDULE		----	----
105	KITCHEN	N/A – SEE ROOM FINISH SCHEDULE		----	----
106	PRESENTER–1	CERAMIC WALL TILE		LATEX–PORTLAND CEMENT THIN SET (MEDIUM BED)	HIGH PERFORMANCE CEMENT GROUT
107	ORDER	N/A – SEE ROOM FINISH SCHEDULE		----	----
108	MANAGER'S AREA	N/A – SEE ROOM FINISH SCHEDULE		----	----
109	CREW ROOM	CERAMIC WALL TILE	(NOTE 4B)	LATEX–PORTLAND CEMENT THIN SET (MEDIUM BED)	HIGH PERFORMANCE CEMENT GROUT
110	COOLER	N/A – SEE ROOM FINISH SCHEDULE		----	----
111	FREEZER	N/A – SEE ROOM FINISH SCHEDULE		----	----
112	COMPUTER CLOSET	N/A – SEE ROOM FINISH SCHEDULE		----	----
113	NOT USED				
114	JANITOR'S CLOSET	N/A – SEE ROOM FINISH SCHEDULE		----	----
115	VESTIBULE	CERAMIC WALL TILE		LATEX–PORTLAND CEMENT THIN SET (MEDIUM BED)	HIGH PERFORMANCE CEMENT GROUT
116	PRESENTER–2	CERAMIC WALL TILE		LATEX–PORTLAND CEMENT THIN SET (MEDIUM BED)	HIGH PERFORMANCE CEMENT GROUT
117	CO2	N/A – SEE ROOM FINISH SCHEDULE		----	----
118	PLAYPLACE VESTIBULE	CERAMIC WALL TILE		LATEX–PORTLAND CEMENT THIN SET (MEDIUM BED)	HIGH PERFORMANCE CEMENT GROUT
119	PLAYPLACE DINING	CERAMIC WALL TILE		LATEX–PORTLAND CEMENT THIN SET (MEDIUM BED)	HIGH PERFORMANCE CEMENT GROUT
120	PLAYPLACE TOY AREA	CERAMIC WALL TILE		NOT APPLICABLE	NOT APPLICABLE
121	UNISEX	CERAMIC WALL TILE	(NOTE 4B)	LATEX–PORTLAND CEMENT THIN SET (MEDIUM BED)	HIGH PERFORMANCE CEMENT GROUT
122	BUN ROOM	N/A – SEE ROOM FINISH SCHEDULE		----	----
123	ROOF ACCESS ROOM	N/A – SEE ROOM FINISH SCHEDULE		----	----

FLOOR TILE SCHEDULE

MARK	ROOM NAME	FLOOR	BASE	MORTAR SETTING BED	GROUT
100	CUSTOMER SERVICE	PORCELAIN FLOOR TILE (NOTE 3)	NONE – WALL TILE	LATEX–PORTLAND CEMENT THIN SET (MEDIUM BED)	HIGH PERFORMANCE CEMENT GROUT
101	DINING	PORCELAIN FLOOR TILE (NOTE 3)	NONE – WALL TILE	LATEX–PORTLAND CEMENT THIN SET (MEDIUM BED)	HIGH PERFORMANCE CEMENT GROUT
102	WOMEN'S TOILET	PORCELAIN FLOOR TILE (NOTE 3)	NONE – WALL TILE (NOTE 4A)	LATEX–PORTLAND CEMENT THIN SET (MEDIUM BED)	HIGH PERFORMANCE CEMENT GROUT
103	MEN'S TOILET	PORCELAIN FLOOR TILE (NOTE 3)	NONE – WALL TILE (NOTE 4A)	LATEX–PORTLAND CEMENT THIN SET (MEDIUM BED)	HIGH PERFORMANCE CEMENT GROUT
104	SUPPORT	QUARRY TILE (NOTE 2)	COVED QUARRY TILE	MODIFIED–PORTLAND CEMENT THIN SET MORTAR (MEDIUM BED)	CHEMICAL RESISTANT, WATER–CLEANABLE, TILE–SETTING EPOXY – 100% SOLIDS, INDUSTRIAL–GRADE
105	KITCHEN	QUARRY TILE (NOTE 2)	COVED QUARRY TILE	MODIFIED–PORTLAND CEMENT THIN SET MORTAR (MEDIUM BED)	CHEMICAL RESISTANT, WATER–CLEANABLE, TILE–SETTING EPOXY – 100% SOLIDS, INDUSTRIAL–GRADE
106	PRESENTER–1	QUARRY TILE (NOTE 2)	COVED QUARRY TILE	MODIFIED–PORTLAND CEMENT THIN SET MORTAR (MEDIUM BED)	CHEMICAL RESISTANT, WATER–CLEANABLE, TILE–SETTING EPOXY – 100% SOLIDS, INDUSTRIAL–GRADE
107	ORDER	QUARRY TILE (NOTE 2)	COVED QUARRY TILE	MODIFIED–PORTLAND CEMENT THIN SET MORTAR (MEDIUM BED)	CHEMICAL RESISTANT, WATER–CLEANABLE, TILE–SETTING EPOXY – 100% SOLIDS, INDUSTRIAL–GRADE
108	MANAGER'S AREA	QUARRY TILE (NOTE 2)	COVED QUARRY TILE	MODIFIED–PORTLAND CEMENT THIN SET MORTAR (MEDIUM BED)	CHEMICAL RESISTANT, WATER–CLEANABLE, TILE–SETTING EPOXY – 100% SOLIDS, INDUSTRIAL–GRADE
109	CREW ROOM	QUARRY TILE (NOTE 2)	COVED QUARRY TILE	MODIFIED–PORTLAND CEMENT THIN SET MORTAR (MEDIUM BED)	CHEMICAL RESISTANT, WATER–CLEANABLE, TILE–SETTING EPOXY – 100% SOLIDS, INDUSTRIAL–GRADE
110	COOLER	QUARRY TILE (NOTE 2)	4" ALUM. COVED BASE	MODIFIED–PORTLAND CEMENT THIN SET MORTAR (MEDIUM BED)	CHEMICAL RESISTANT, WATER–CLEANABLE, TILE–SETTING EPOXY – 100% SOLIDS, INDUSTRIAL–GRADE
111	FREEZER	QUARRY TILE (NOTE 2)	4" ALUM. COVED BASE	MODIFIED–PORTLAND CEMENT THIN SET MORTAR (MEDIUM BED)	CHEMICAL RESISTANT, WATER–CLEANABLE, TILE–SETTING EPOXY – 100% SOLIDS, INDUSTRIAL–GRADE
112	COMPUTER CLOSET	QUARRY TILE (NOTE 2)	COVED QUARRY TILE	MODIFIED–PORTLAND CEMENT THIN SET MORTAR (MEDIUM BED)	CHEMICAL RESISTANT, WATER–CLEANABLE, TILE–SETTING EPOXY – 100% SOLIDS, INDUSTRIAL–GRADE
113	NOT USED				
114	JANITOR'S CLOSET	PORCELAIN FLOOR TILE (NOTE 3)	COVED QUARRY TILE	LATEX–PORTLAND CEMENT THIN SET (MEDIUM BED)	HIGH PERFORMANCE CEMENT GROUT
115	VESTIBULE	PORCELAIN FLOOR TILE (NOTE 3)	NONE – WALL TILE	LATEX–PORTLAND CEMENT THIN SET (MEDIUM BED)	HIGH PERFORMANCE CEMENT GROUT
116	PRESENTER–2	QUARRY TILE (NOTE 2)	COVED QUARRY TILE	MODIFIED–PORTLAND CEMENT THIN SET MORTAR (MEDIUM BED)	CHEMICAL RESISTANT, WATER–CLEANABLE, TILE–SETTING EPOXY – 100% SOLIDS, INDUSTRIAL–GRADE
117	CO2	N/A – SEE ROOM FINISH SCHEDULE	----	----	----
118	PLAYPLACE VESTIBULE	PORCELAIN FLOOR TILE (NOTE 3)	NONE – WALL TILE	LATEX–PORTLAND CEMENT THIN SET (MEDIUM BED)	HIGH PERFORMANCE CEMENT GROUT
119	PLAYPLACE DINING	PORCELAIN FLOOR TILE (NOTE 3)	NONE – WALL TILE	LATEX–PORTLAND CEMENT THIN SET (MEDIUM BED)	HIGH PERFORMANCE CEMENT GROUT
120	PLAYPLACE TOY AREA	IMPACT FLOORING	NONE – WALL TILE	NOT APPLICABLE	NOT APPLICABLE
121	UNISEX	PORCELAIN FLOOR TILE (NOTE 3)	NONE – WALL TILE (NOTE 4A)	LATEX–PORTLAND CEMENT THIN SET (MEDIUM BED)	HIGH PERFORMANCE CEMENT GROUT
122	BUN ROOM	QUARRY TILE (NOTE 2)	COVED QUARRY TILE	MODIFIED–PORTLAND CEMENT THIN SET MORTAR (MEDIUM BED)	CHEMICAL RESISTANT, WATER–CLEANABLE, TILE–SETTING EPOXY – 100% SOLIDS, INDUSTRIAL–GRADE
123	ROOF ACCESS ROOM	QUARRY TILE (NOTE 2)	COVED QUARRY TILE	MODIFIED–PORTLAND CEMENT THIN SET MORTAR (MEDIUM BED)	CHEMICAL RESISTANT, WATER–CLEANABLE, TILE–SETTING EPOXY – 100% SOLIDS, INDUSTRIAL–GRADE

GENERAL TILE NOTES:

1. REFERENCE: 2017 McDONALD'S PROJECT MANUAL – SECTION 093000
2. KITCHEN FLOOR TILE:
   TILE: CROSSVILLE 6"x6" 'METROPOLITAN QUARRY BASICS ABRASIVE'
   GROUT: KERAPOXY IEG BLACK #10 BY MAPEI
   CHARCOAL #47 BY MAPEI (FOR OPTIONAL GREY TILE)
   COLOR: 31A MAYFLOWER RED (STANDARD)
   57A PURITAN GRAY (OPTIONAL) – VERIFY W/ MCDONALD'S ACM
3. DINING ROOM FLOOR TILE:
   MAIN & ACCENT: USE ONLY APPROVED TILE SERIES AND COLORS BY CROSSVILLE AND EUROWEST. VERIFY COLOR AND PATTERN PER INTERIOR DECOR DRAWINGS.
   A) MUST BE PER McDONALD'S USA, LLC: STANDARDS FOR INTERIOR FLOOR TILE AND APPROVED TILE LIST.
   B) MUST MEET THE FOLLOWING:
   STATIC COEFFICIENT OF FRICTION (PER ASTM F1667–96)
   LEVEL SURFACES: MINIMUM 0.50 DRY AND WET (McDONALD'S STANDARD)
   DYNAMIC COEFFICIENT OF FRICTION (PER ANSI A137.1 2012)
   LEVEL SURFACES: MINIMUM 0.5 DRY AND WET (McDONALD'S STANDARD)
4. TILE TRANSITION AND EDGE PROTECTION:
   A) TILE BASE (RESTROOM ONLY): SCHLUTER DILEX–AHK SERIES, BRUSHED STAINLESS STEEL.
   B) TILE EDGE PROTECTION (WALL TRANSITION): SCHLUTER–RONDEC–DB, SATIN ANODIZED ALUMINUM.
   C) TILE CORNER PROTECTION (OUTSIDE CORNER): SCHLUTER–RONDEC–AE, SATIN ANODIZED ALUMINUM.
   D) SEE INTERIOR DECOR DRAWINGS FOR ALL LOCATIONS.

   BEFORE FINAL INSPECTION, REMOVE PROTECTIVE COVERINGS AND PERFORM FINAL CLEANING.
5. TILE CLEANER: DETERDEK, BY FILA SURFACE CARE PRODUCTS – NO SUBSTITUTIONS ALLOWED
   CAN BE ORDERED BY EUROWEST, CROSSVILLE, OR DIRECT FROM MANUFACTURER: FILA/DETEREK
   POST INSTALLATION CLEANING REQUIRED ON ALL FLOOR TILE INSTALLTIONS PRIOR TO RESTAURANT TURN OVER.

   APPLY CLEANER PER MANUFACTURER'S WRITTEN INSTRUCTIONS. REFERENCE: McDONDALDS PROJECT MANUAL – SECTION 09300 TILING INTERIOR.
6. GROUT COLOR AND MANUFACTURER AS INDICATED ON SHEET A1.0 AND INTERIOR DECOR DRAWINGS.

ROOM FINISH SCHEDULE

MARK	ROOM NAME	WALLS: SUBSTRATE	WALLS: FINISH	WALLS	CEILING *	REMARKS
100	CUSTOMER SERVICE	CEMENT BOARD	TILE **	SEE DECOR DRAWINGS, TILE AS NOTED ON A1.0	2'x2' ACOUST., PAINTED GYP. BD	VERIFY FINISHES WITH DECOR COMPANY
101	DINING	CEM BD/GYP BD	TILE/V.W.C. **	SEE DECOR DRAWINGS FOR EXTENT	2'x2' ACOUST., PAINTED GYP. BD	VERIFY FINISHES WITH DECOR COMPANY
102	WOMEN'S TOILET	CEMENT BOARD	TILE	SEE DECOR DRAWINGS FOR EXTENT	PAINTED GYP. BD.	VERIFY FINISHES WITH DECOR COMPANY
103	MEN'S TOILET	CEMENT BOARD	TILE	SEE DECOR DRAWINGS FOR EXTENT	PAINTED GYP. BD.	VERIFY FINISHES WITH DECOR COMPANY
104	SUPPORT	1/2" PLYWD (NOTE 4)	FRP	STAINLESS STEEL CORNERS	2'x2' VINYL–FACED LAY–IN	SEE NOTE 5 FOR WALL FINISH EXCEPTIONS
105	KITCHEN	1/2" PLYWD (NOTE 4)	FRP	STAINLESS STEEL CORNERS, TILE OVER CEM BD AS NOTED ON A1.0	2'x2' VINYL–FACED LAY–IN	SEE SHEET A1.0 FOR EXTENT OF CEMENT BOARD, SS OR CT
106	PRESENTER–1	CEM BD, 1/2" PLYWD (NOTE 4)	TILE	TILE AS NOTED ON A1.0	2'x2' VINYL–FACED LAY–IN	
107	ORDER	1/2" PLYWD (NOTE 4)	FRP		2'x2' VINYL–FACED LAY–IN	
108	MANAGER'S AREA	1/2" PLYWD (NOTE 4)	FRP		2'x2' VINYL–FACED LAY–IN	
109	CREW ROOM	CEM BD/GYP BD	TILE/V.W.C. **	SEE DECOR DRAWINGS FOR EXTENT	2'x2' ACOUST. LAY–IN	VERIFY FINISHES WITH DECOR COMPANY
110	COOLER	N/A	PRE–FAB METAL SKIN PANEL		PRE–FAB METAL SKIN PANEL	BASE SUPPLIED BY KES
111	FREEZER	N/A	PRE–FAB METAL SKIN PANEL		PRE–FAB METAL SKIN PANEL	BASE SUPPLIED BY KES
112	COMPUTER CLOSET	1/2" PLYWD (NOTE 4)	FRP		PAINTED GYP. BD.	
113	NOT USED					
114	JANITOR'S CLOSET	1/2" PLYWD (NOTE 4)	FRP		PAINTED GYP. BD.	EXT GRADE PLYWOOD (NOTE 4) SEE NOTE 5B
115	VESTIBULE	CEM BD/GYP BD	TILE/V.W.C. **	SEE DECOR DRAWINGS FOR EXTENT	2'x2' ACOUST. LAY–IN WITH HOLD DOWN CLIPS	OPTIONAL PEDIMAT. SEE DETAIL 7/A6.1. VERIFY WITH MCD CONSTRUCTION MANGER
116	PRESENTER–2	CEM BD, 1/2" PLYWD (NOTE 4)	TILE	TILE AS NOTED ON A1.0	2'x2' VINYL–FACED LAY–IN	
117	CO2	1/2" PLYWD (NOTE 4)	FRP		PAINTED GYP. BD.	EXT GRADE PLYWOOD (NOTE 4) SEE NOTE 7
118	PLAYPLACE VESTIBULE	CEM BD/GYP BD	TILE/V.W.C.	SEE DECOR DRAWINGS FOR EXTENT	ACOUSTICAL PANEL, PAINTED STRUCT. ABOVE	16'–0" MIN. TO B.O. JOIST –SEE STRUCTURAL DRAWINGS
119	PLAYPLACE DINING	CEM BD/GYP BD	TILE/V.W.C. **	SEE DECOR DRAWINGS FOR EXTENT	ACOUSTICAL PANEL, PAINTED STRUCT. ABOVE	16'–0" MIN. TO B.O. JOIST –SEE STRUCTURAL DRAWINGS
120	PLAYPLACE TOY AREA	CEM BD/GYP BD	TILE/V.W.C. **	SEE DECOR DRAWINGS FOR EXTENT	PAINTED GYP. BD.	
121	UNISEX	CEMENT BOARD	TILE	SEE DECOR DRAWINGS FOR EXTENT	PAINTED GYP. BD.	
122	BUN ROOM	1/2" PLYWD (NOTE 4)	FRP	STAINLESS STEEL CORNERS	2'x2' VINYL–FACED LAY–IN	SEE NOTE 5 FOR WALL FINISH EXCEPTIONS
123	ROOF ACCESS ROOM	1/2" PLYWD (NOTE 4)	FRP		OPEN TO STRUCTURE	EXT GRADE PLYWOOD (NOTE 4) SEE NOTE 7

GENERAL FINISH NOTES:

1. ALL FINISH SURFACES OF WALL AND CEILING MATERIALS SHALL BE CLASS B AND SHALL HAVE A FLAME SPREAD RATING OF 26 TO 75 AND A SMOKE DENSITY OF 450 MAX. (PER IBC TABLE 803.9).
2. DECORATIVE MATERIALS SHALL BE FLAME RETARDANT AND MEET THE CRITERIA OF NFPA 701.
3. DECORATIVE MATERIAL SHALL NOT CONCEAL EXITS, EXIT LIGHTS, ALARM STATIONS, HOSE CABINETS, AND EXTINGUISHER LOCATIONS
4. WHEN BUILDING TYPE IS A NON–COMBUSTIBLE CATEGORY, ALL PLYWOOD SHALL BE FIRE RETARDANT TREATED.
5. A. FRP OVER CEMENT BD BEHIND 3–COMP SINK TO HGT OF BACK SPLASH
   B. TILE WAINSCOT TO 6' A.F.F. OVER CEMENT BD. OVER EXT GRADE PLYWOOD (NOTE 4) AT MOP SINKS
6. PROVIDE CEMENT BOARD BACKER OR EQUIVALENT AT ALL TILE LOCATIONS.
7. PROVIDE VAPOR BARRIER BEHIND PLYWOOD AT WALLS AND BEHIND GYP. AT CEILING

* SEE CEILING PLAN FOR HEIGHTS & LAYOUTS
** VWC ON EXTERIOR WALL ASSEMBLIES TO BE PERFORATED

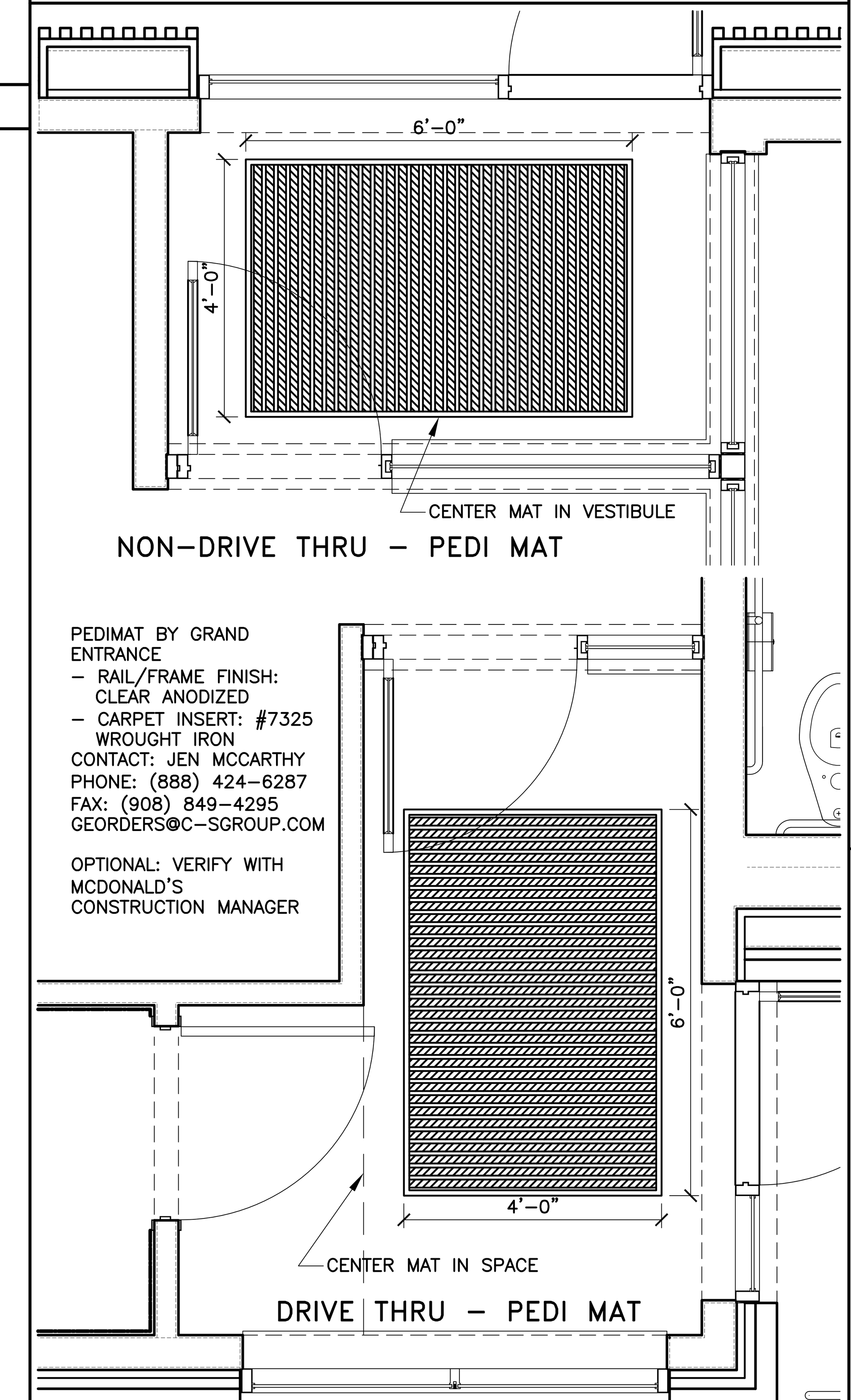

7 A6.1 PEDIMAT (OPTIONAL)
1/2" =1'-0"

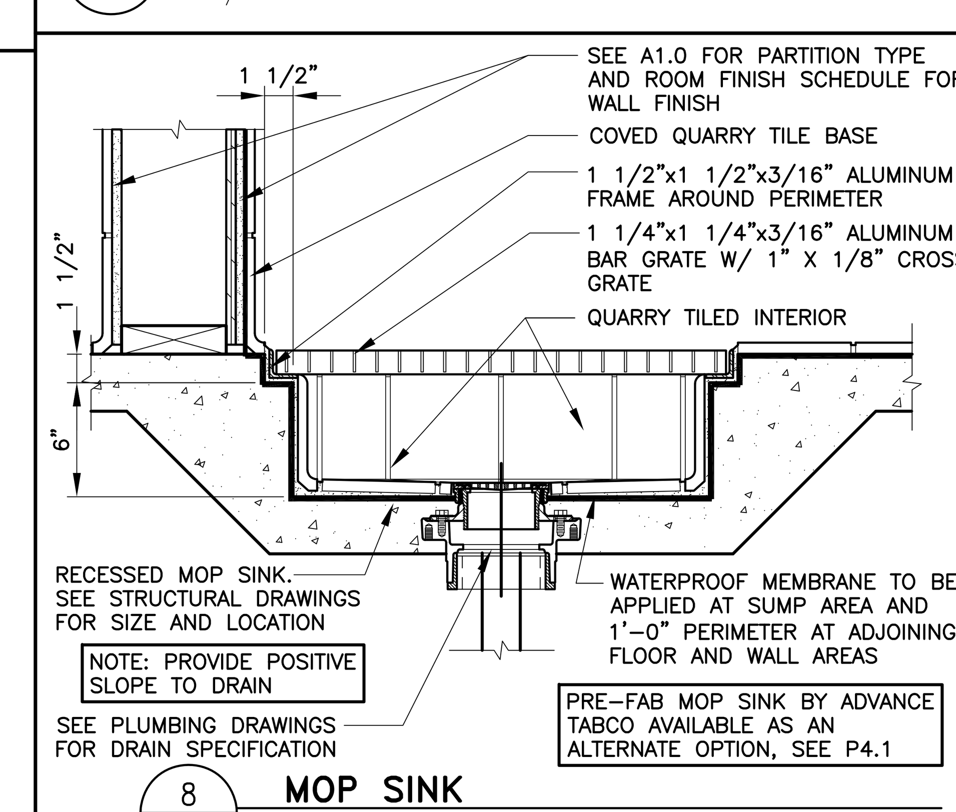

8 A6.1 MOP SINK
1 1/2"=1'-0"

REV	DATE	DESCRIPTION	BY
.	10/15/18	USRD PROGRESS SET REVIEW	DIA
.	02/22/19	PERMIT SET	DIA

I hereby certify that this plan, specification or report was prepared by me or under my direct supervision and that I am a duly registered ARCHITECT under the laws of the State of IOWA.
BRIAN R. JOHNSON
Signature
02/22/2019 Date
05312 Registration Number
EXPIRES 6/30/2020

PREPARED BY:
reprise DESIGN
Architecture, Inc.
ARCHITECTURE & PLANNING
12400 PORTLAND AVENUE SOUTH, SUITE 100
BURNSVILLE, MN 55337
EMAIL: DATA@REPRISEDESIGN.COM
PHONE: (952) 252–4042
FAX: (952) 252–4043

PREPARED FOR:
McDonald's USA, LLC
©2018 McDonald's USA, LLC
These drawings and specifications are the confidential and proprietary property of McDonald's USA, LLC and shall not be copied or reproduced without written authorization. The contract documents were prepared for use on this specific site in conjunction with its issue date and are not suitable for use on a different site or at a later time. Use of these drawings for reference or example on another project requires the services of properly licensed architects and engineers. Reproduction of the contract documents for reuse on another project is not authorized.

DRAWN BY: DIA
STD ISSUE DATE: 2018_09
REVIEWED BY: KD
DATE ISSUED: 02/22/2019
RD#18190

TITLE: 2018 STANDARD BUILDING – BB20 45114–(–F5)–PP–TE–WOOD/WOOD
DESCRIPTION: WOOD BEARING WALLS W/4" BRICK EXTERIOR FINISH & CI; WOOD ROOF TRUSS FRAMING; ACM ALPOLIC/BATTEN/METAL PANEL/BRICK EXTERIOR FINISH
SITE ID: 14–0069
SITE ADDRESS: 1227 SOUTH MARSHALL STREET BOONE, IA

SHEET NO. 014–0069.00.0
A6.1
FINISH SCHEDULES