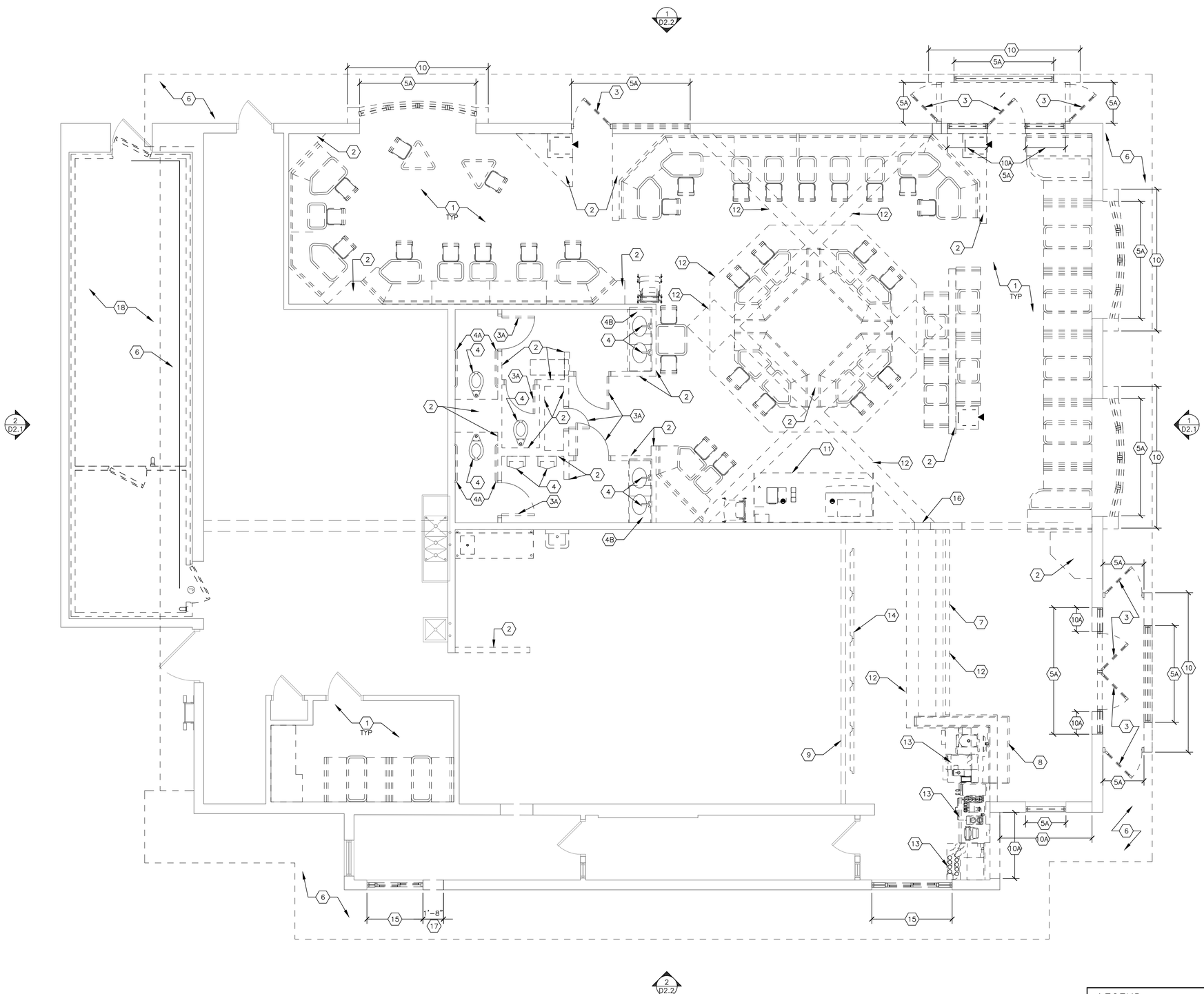

1. REFER TO A1.1 FOR NEW PLAN CONFIGURATION. VERIFY ALL DIMENSIONS OF DEMOLITION WITH A1.1
2. SEE D2.1, DEMOLITION ELEVATIONS, FOR EXTENT OF EXTERIOR DEMOLITION
3. SEE SEPARATE CIVIL DRAWINGS FOR REQUIRED DEMOLITION AND MODIFICATIONS OF SIDEWALKS, CURB RAMPS, RAMPS, PARKING AISLES, VEHICULAR DRIVE–LANES, DRIVE–THRU LANES, TRASH CORAL, LANDSCAPE, ETC.
4. DIMENSIONS ARE TO FACE OF FINISH AND/OR TO COLUMN REFERENCE LINES, U.N.O.
5. THESE DRAWINGS WERE PREPARED BASED ON INFORMATION ATTAINED FROM A SITE SURVEY. CONTRACTOR TO VERIFY ALL EXISTING CONDITIONS IN FIELD PRIOR TO DEMOLITION & NOTIFY THE ARCHITECT IN CASE OF DISCREPANCIES IMMEDIATELY. DEMOLITION IS TO BE EXECUTED SO AS NOT TO DISTURB EXISTING STRUCTURAL & ROOFING SYSTEMS, AND OTHER AREAS THAT ARE INTENDED TO REMAIN INTACT. VERIFY ALL CONSTRUCTION TO BE REMOVED THAT IS NOT INTEGRAL TO STRUCTURAL SYSTEM PRIOR TO DEMOLITION UNLESS NOTED.
6. ALL DIMENSIONS SHOWN AS EXISTING SHOULD BE FIELD VERIFIED BY CONTRACTOR PRIOR TO DEMOLITION. VERIFY ALL DEMOLITION WORK W/ NEW CONSTRUCTION & INSTALLATION DRAWINGS PRIOR TO BEGINNING CONSTRUCTION.
7. DEMOLITION CONTRACTOR TO COORDINATE & REVIEW ALL CONSTRUCTION DOCUMENTS & DETERMINE THE EXTENT OF DEMOLITION WORK & BECOME FAMILIAR WITH THEM THOROUGHLY BEFORE PERFORMING ANY DEMOLITION WORK. BY THE ACT OF STARTING DEMOLITION, THE CONTRACTOR WILL BE DEEMED TO HAVE COMPLIED WITH THE FOREGOING, TO HAVE ACCEPTED SUCH CONDITIONS, AND TO HAVE MADE THE NECESSARY ALLOWANCES IN PREPARING HIS BID.
8. ELECTRICAL DEMOLITION NOTE: REFER TO ELECTRICAL DRAWINGS FOR DETAILED ELECTRICAL DEMOLITION NOTES.
9. VERIFY DISPOSITION OF ALL FURNISHINGS, MILLWORK, LIGHTING FIXTURES, ETC. TO BE REMOVED W/ OWNER. ALL ITEMS TO BE DISPOSED SHALL BE DISPOSED OF OFF–SITE AND IN AN EXPEDITIOUS MANNER.
10. ROOFING CONTRACTOR TO FIELD INSPECT EXISTING ROOF FOR WEATHER TIGHTNESS & PROPER DRAINAGE PRIOR TO BID. CONTRACTOR SHALL BE RESPONSIBLE FOR FIELD VERIFICATION OF EXISTING ROOF CONDITION AND FOR INCLUDING ANY NECESSARY REPAIR COSTS IN BID.
11. SAWCUT & REMOVE EXISTING SLABS AS REQUIRED FOR UNDERGROUND ELECTRICAL & PLUMBING LINES. REFER TO PLUMBING, ELECTRICAL & KITCHEN DRAWINGS FOR ALL SAWCUTS & TRENCHING WORK REQUIRED. ALL CONCRETE FLOOR WORK TO BE FINISHED FLUSH WITH EXISTING FLOOR. DOWEL NEW SLABS TO EXISTING W/ #4 REBAR @ 24" O.C. EACH SIDE (STAGGERED). REBAR TO EXTEND 6" INTO EXISTING SLAB & ACROSS CUT OPENING. SECURE REBAR INTO EXISTING SLAB W/ EPOXY GROUT. REPLACE OR REPAIR ANY VAPOR BARRIERS DISTURBED DURING EXCAVATIONS.
12. CONTRACTOR SHALL PROVIDE ALL TEMPORARY BRACING AS REQUIRED TO MAINTAIN STRUCTURAL STABILITY OF THE EXISTING STRUCTURE DURING ALL PHASES OF CONSTRUCTION.
13. PROTECT FROM DAMAGE DURING CONSTRUCTION ALL EXISTING WALLS, FLOORS, CEILINGS, ETC. THAT ARE TO REMAIN. CONTRACTOR TO PATCH & REPAIR ANY DAMAGED PORTIONS OF THE EXISTING BUILDING AS REQUIRED TO MATCH THE EXISTING ADJACENT CONSTRUCTION & FINISHES.
14. THIS PLAN INDICATES A GENERAL SCOPE OF WORK TO BE PERFORMED AND DOES NOT RELIEVE THE CONTRACTOR TO COMPLETE THE BUILDING MODIFICATIONS AS SHOWN AND REQUIRED BY THE CONTRACT DOCUMENTS, INCLUDING BUT NOT LIMITED TO PLUMBING, ELECTRICAL & HVAC WORK.
15. IF CONTRACTOR ENCOUNTERS ANY HAZARDOUS MATERIALS DURING DEMOLITION OR CONSTRUCTION, HE SHALL IMMEDIATELY SUSPEND WORK & NOTIFY THE MCDONALD'S AREA CONSTRUCTION MANAGER BEFORE PROCEEDING.
16. ALL DEMOLITION SHALL BE CARRIED OUT IN A SAFE MANNER & IN STRICT ACCORDANCE WITH OSHA REGULATIONS.
17. THE SUB–CONTRACTOR SHALL FIELD VERIFY THE EXTENT OF DEMOLITION. THE WORK INCLUDES, BUT IS NOT LIMITED TO THE DEMOLITION AND REMOVAL OF ANY WALLS, COUNTERS, FURNITURE, BULKHEADS, DOORS, PLUMBING, MECHANICAL AND ELECTRICAL ITEMS INCLUDING CONDUITS AND DUCTWORK AS SHOWN ON THE DRAWINGS OR AS REQUIRED TO COMPLETE THE INSTALLATION OF THE NEW WORK FOR A COMPLETE JOB.
18. REMOVE ANY SINKS, WATER CLOSETS, URINALS, LAVATORIES, FLOOR DRAINS, NOTED ON DRAWINGS AS WELL AS ALL ASSOCIATED PLUMBING ACCESSORIES. CAP, PLUG ALL ABANDONED SUPPLY & WASTE LINES. PATCH & SEAL ALL FLOOR PENETRATIONS. SEE MECHANICAL & PLUMBING DRAWINGS FOR DETAILED DEMOLITION NOTES.
19. WHEN UTILITIES ARE REMOVED, CAP & SEAL A MINIMUM OF 8" BELOW FINISH FLOOR OR A MINIMUM OF 6" ABOVE FINISH CEILING.

DEMOLITION KEYNOTES (NOT ALL KEY NOTES MAY BE USED)

1. REMOVE EXISTING DECOR ELEMENTS. REFER TO SEPARATE DECOR DRAWINGS FOR EXTENT OF INTERIOR REMODEL
2. REMOVE EXISTING INTERIOR WALL PARTITION. PATCH/REPAIR ADJACENT INTERIOR FLOORS AND WALLS IN KIND
3. REMOVE EXISTING DOOR AND ALL ASSOCIATED HARDWARE
3A. REMOVE EXISTING DOOR, FRAME AND ALL ASSOCIATED HARDWARE.
4. REMOVE EXISTING PLUMBING FIXTURE. EXISTING SANITARY PIPING BELOW SLAB TO REMAIN FOR NEW USE. CONNECT VENTS, DOMESTIC WATER PIPING AND HOT/COLD WATER PIPING TO NEAREST EXISTING ASSOCIATED PIPING. SEE RESTROOM NOTES ABOVE.
4A. REMOVE EXISTING GRAB BARS; PATCH AND REPAIR WALL SURFACE. SEE RESTROOM NOTES ABOVE.
4B. REMOVE EXISTING LAVATORY COUNTERTOP AND BACKSPLASH.
5. REMOVE EXISTING STOREFRONT GLAZING. STOREFRONT FRAMING TO REMAIN
5A. REMOVE EXISTING STOREFRONT GLAZING AND FRAMING.
6. REMOVE PORTION OF EXISTING MANSARD ROOF PROJECTION ABOVE. ALIGN REMOVAL OF PROJECTION ABOVE WITH EXISTING ADJACENT WALL BELOW MANSARD. REFER TO WALL SECTIONS FOR EXTENT OF REMOVAL.
7. REMOVE EXISTING COUNTER SYSTEM
8. REMOVE EXISTING McCAFE COUNTER AND WALL SYSTEM
9. EXISTING SOFFIT/BULKHEAD ABOVE TO REMAIN. REFER TO A1.2 FOR EXTENT OF CEILING TO REMAIN
10. REMOVE EXISTING WALL CONSTRUCTION AND FOUNDATION BELOW TO 8" BELOW GRADE
10A. REMOVE EXISTING WALL CONSTRUCTION TO TOP OF SLAB AND GRIND SMOOTH; PREP FOR NEW FINISH.
11. RELOCATE EXISTING SELF–SERVICE–BEVERAGE BAR (SSBB) SEE PLUMBING DRAWINGS
12. REMOVE EXISTING BULKHEAD/SOFFIT ABOVE
13. RELOCATE EXISTING KITCHEN EQUIPMENT
14. EXISTING MENU BOARDS TO BE REMOVED.
15. REMOVE EXISTING DRIVE–THRU WINDOW SIDELIGHT AND TRANSOM; SEE SHEET D2.2 AND A2.2
16. REMOVE EXISTING STRUCTURAL COLUMN G.C. TO FIND VERIFY AND SHORE AS REQUIRED FOR NEW BEAM AND COLUMNS
17. REMOVE EXISTING WALL CONSTRUCTION FOR NEW DT WINDOW
18. REMOVE EXISTING FREEZER/COOLER PANELS AND DOORS
19. REMOVE/RELOCATE EXISTING KITCHEN EQUIPMENT
20. REMOVE/RELOCATE EXISTING HAND SINK

LEGEND

- EXISTING CONSTRUCTION TO BE REMOVED
- EXISTING CONSTRUCTION TO REMAIN

REV	DATE	DESCRIPTION	BY
–	–	–	–

ARCHITECT OF RECORD:

STATE OF MISSOURI
KENNETH MACKAME
NUMBER A-2017034870
04/13/18
ARCHITECT

PREPARED BY:
CORE STATES GROUP
CORESTATES, INC.
1700 Industrial Drive
Suite 5
Belgrade, MT 59714
406-388-4600
www.corestatesgroup.com

©2019 McDonald's Corporation

PREPARED FOR:
McDonald's USA, LLC

These drawings and specifications are the confidential and proprietary property of McDonald's USA, LLC and shall not be copied or reproduced without written authorization. The contract documents were prepared for use on the specific site contemplated with its issue date and are not suitable for use on other sites or at a later time. Re-use of these drawings for reference or example on another project requires the services of properly licensed architects and engineers. Reproduction of the contract documents for re-use on another project is not authorized.

DRAWN BY: K.SCHOPP	STD ISSUE DATE MAY 2018
REVIEWED BY B.LoSURS	DATE ISSUED 10/12/18
C.S.G. PROJECT # MCD–24772	

TITLE: MRP PROGRAM CORE 16 2.0

DESCRIPTION
EXISTING MASONRY WALL CONSTRUCTION
EXISTING WOOD ROOF TRUSSES
TILE ARCADES – FRONT ENTRY

SITE ID	SITE ADDRESS	
024–0294	815 EASTLAND DRIVE	JEFFERSON CITY, MO 65101

SHEET NO. D1.1

DEMO. PLAN

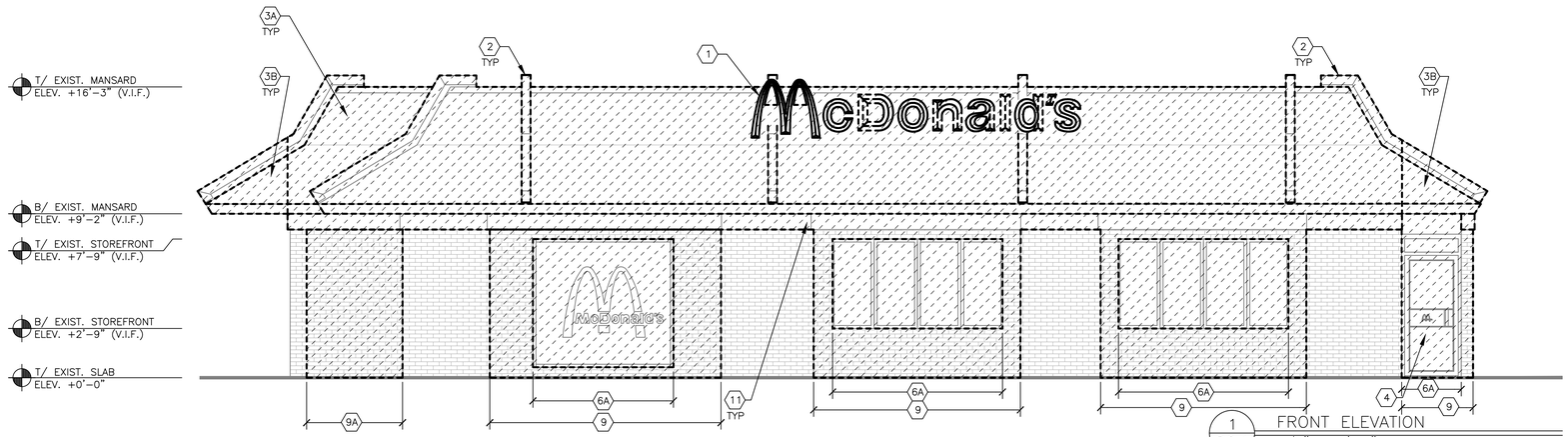

1 / D2.1 FRONT ELEVATION
1/4" = 1'-0"

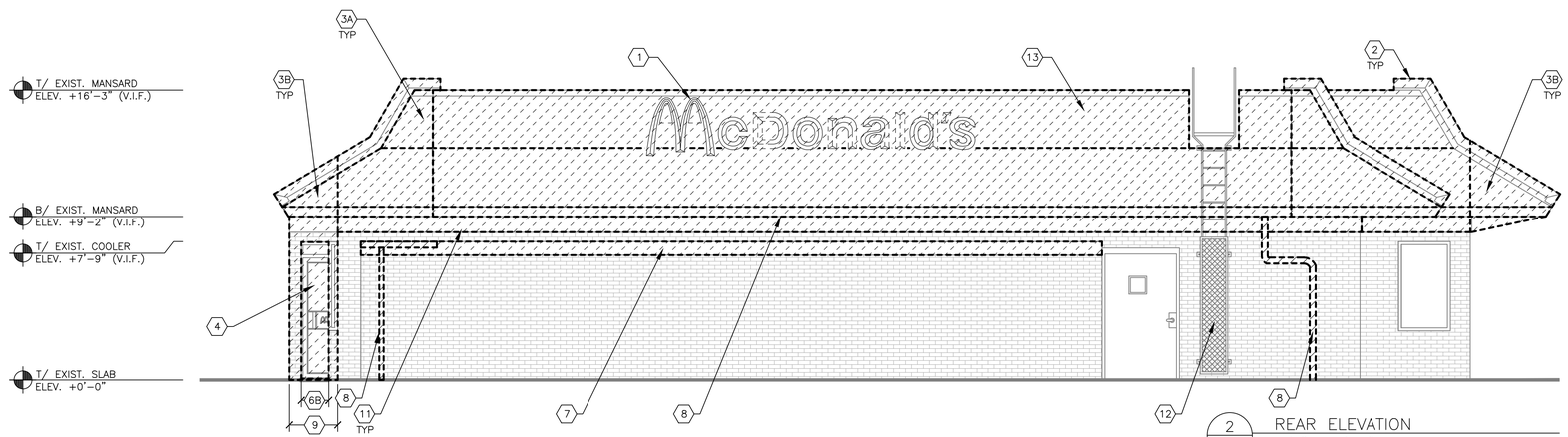

2 / D2.1 REAR ELEVATION
1/4" = 1'-0"

DEMOLITION KEYNOTES

1. REMOVE EXISTING SIGNAGE
2. REMOVE EXISTING MANSARD LIGHT BEAMS
3A. REMOVE EXISTING ROOFING AT LOWER AND UPPER PORTION OF DOUBLE MANSARD ROOF
3B. REMOVE PORTION OF EXISTING MANSARD PROJECTION. ALIGN REMOVAL WITH EXISTING WALL BELOW
4. REMOVE EXISTING STOREFRONT DOOR AND ALL ASSOCIATED HARDWARE.
5. NOT USED
6A. REMOVE EXISTING GLAZING PANEL AND STOREFRONT FRAMING
6B. REMOVE EXISTING GLAZING (AND INFILL PANELS AS APPLICABLE), STOREFRONT FRAMING TO REMAIN.
7. REMOVE EXISTING COPING SYSTEM BACK TO EXISTING SUBSTRATE. PATCH/REPAIR EXISTING SUBSTRATE DAMAGED FROM DEMOLITION IN KIND
8. REMOVE EXISTING METAL GUTTER AND DOWNSPOUT.
9. REMOVE EXISTING WALL CONSTRUCTION DOWN TO 8" BELOW SLAB
9A. REMOVE EXISTING WALL CONSTRUCTION DOWN TO TOP OF SLAB
9B. REMOVE PORTION OF EXISTING WALL CONSTRUCTION FOR NEW WINDOW
10. REMOVE EXISTING DRIVE-THRU WINDOW, SIDELIGHTS AND TRANSOM
11. REMOVE EXISTING FRIEZE BOARD BACK TO SUBSTRATE.
12. EXISTING ROOF LADDER TO REMAIN.
13. EXISTING ROOF SCREEN TO BE REMOVED.

LEGEND

- EXTENT OF EXISTING CONSTRUCTION TO BE REMOVED
- EXISTING CONSTRUCTION TO REMAIN

REV	DATE	DESCRIPTION	BY
1	1	1	1

ARCHITECT OF RECORD:
STATE OF MISSOURI
KENTON MAX WAGNER
NUMBER A-2017034870
ARCHITECT
04/18/19

PREPARED BY:
CORE STATES GROUP
CORESTATES, INC.
1700 Industrial Drive
P.O. Box 1276
Rogers, AR 72756
479.636.4200
www.core-eng.com

PREPARED FOR:
McDonald's USA, LLC

© 2019 McDonald's Corporation

These drawings and specifications are the confidential and proprietary property of McDonald's USA, LLC and shall not be copied or reproduced without written authorization. The contract documents were prepared for use on this specific site in conjunction with its issue date and are not suitable for use on a different site or at a later time. Use of these drawings for reference or scope on another project requires the services of properly licensed architects and engineers. Reproduction of the contract documents for reuse on another project is not authorized.

DRAWN BY: K.SCHOPP
STD ISSUE DATE: MAY 2018
REVIEWED BY: B.LASURS
DATE ISSUED: 10/12/18
C.S.G. PROJECT #: MCD-24772

TITLE: MRP PROGRAM CORE 16 2.0
DESCRIPTION: EXISTING MASONRY WALL CONSTRUCTION; EXISTING WOOD ROOF TRUSSES; TILE ARCADES - FRONT, ENTRY
SITE ID: 024-0294
SITE ADDRESS: 815 EASTLAND DRIVE JEFFERSON CITY, MO 65101

SHEET NO. D2.1
DEMO. ELEVATIONS

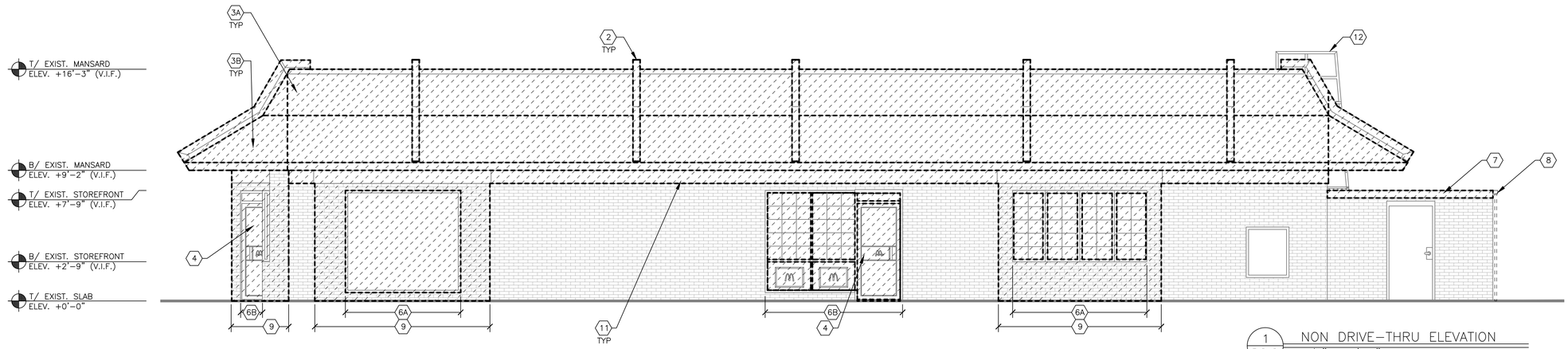

1 / D2.2 NON DRIVE-THRU ELEVATION
1/4" = 1'-0"

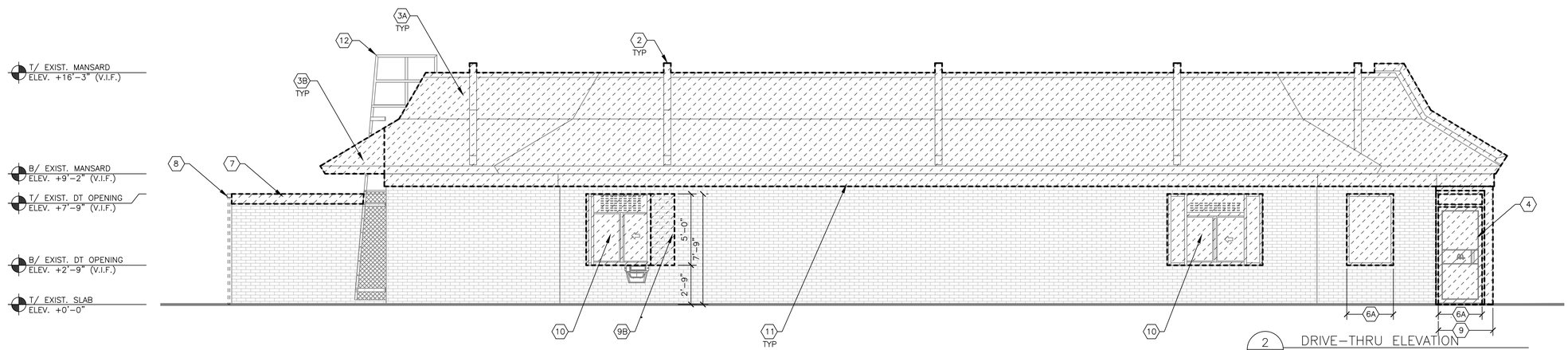

2 / D2.2 DRIVE-THRU ELEVATION
1/4" = 1'-0"

DEMOLITION KEYNOTES

1. REMOVE EXISTING SIGNAGE
2. REMOVE EXISTING MANSARD LIGHT BEAMS
3A. REMOVE EXISTING ROOFING AT LOWER AND UPPER PORTION OF DOUBLE MANSARD ROOF
3B. REMOVE PORTION OF EXISTING MANSARD PROJECTION. ALIGN REMOVAL WITH EXISTING WALL BELOW
4. REMOVE EXISTING STOREFRONT DOOR AND ALL ASSOCIATED HARDWARE.
5. NOT USED
6A. REMOVE EXISTING GLAZING PANEL AND STOREFRONT FRAMING
6B. REMOVE EXISTING GLAZING (AND INFILL PANELS AS APPLICABLE), STOREFRONT FRAMING TO REMAIN.
7. REMOVE EXISTING COPING SYSTEM BACK TO EXISTING SUBSTRATE. PATCH/REPAIR EXISTING SUBSTRATE DAMAGED FROM DEMOLITION IN KIND
8. REMOVE EXISTING METAL GUTTER AND DOWNSPOUT.
9. REMOVE EXISTING WALL CONSTRUCTION DOWN TO 8" BELOW SLAB
9A. REMOVE EXISTING WALL CONSTRUCTION DOWN TO TOP OF SLAB
9B. REMOVE PORTION OF EXISTING WALL CONSTRUCTION FOR NEW WINDOW
10. REMOVE EXISTING DRIVE-THRU WINDOW, SIDELIGHTS AND TRANSOM
11. REMOVE EXISTING FRIEZE BOARD BACK TO SUBSTRATE.
12. EXISTING ROOF LADDER TO REMAIN.
13. EXISTING ROOF SCREEN TO BE REMOVED.

LEGEND

- EXTENT OF EXISTING CONSTRUCTION TO BE REMOVED
- EXISTING CONSTRUCTION TO REMAIN

REV	DATE	DESCRIPTION	BY
-	-	-	-

ARCHITECT OF RECORD:
STATE OF MISSOURI
KENNETH MACKAMORE
NUMBER A-2017034870
04/18/18
ARCHITECT

PREPARED BY:
CORE STATES GROUP
CORESTATES, INC.
1700 Industrial Drive
Suite 100
Rogers, AR 72756
(479) 621-1000
www.core-eng.com

PREPARED FOR:
McDonald's USA, LLC

© 2019 McDonald's Corporation

These drawings and specifications are the confidential and proprietary property of McDonald's USA, LLC and shall not be copied or reproduced without written authorization. The drawings and specifications were prepared for use on this specific site in conjunction with its issue date and are not suitable for use on a different site or at a later time. Use of these drawings and specifications on other projects without the consent of the services of properly licensed architects and engineers. Reproduction of the contract documents for reuse on another project is not authorized.

DRAWN BY: K.SCHOPP
STD ISSUE DATE: MAY 2018
REVIEWED BY: B.LASURS
DATE ISSUED: 10/12/18
C.S.G. PROJECT #: MCD-24772

TITLE: MRP PROGRAM CORE 16 2.0
DESCRIPTION: EXISTING MASONRY WALL CONSTRUCTION; EXISTING WOOD ROOF TRUSSES; TILE ARCADES - FRONT, ENTRY
SITE ID: 024-0294
SITE ADDRESS: 815 EASTLAND DRIVE JEFFERSON CITY, MO 65101

SHEET NO. D2.2
DEMO. ELEVATIONS