NOTE:
-DESIGN CODES
-IBC 2012
-ASCE 7-10
-ACI 318-11
-AISC 360-11
-AWS D1.3
-WIND SPEED 115 MPH, 3 SEC GUST
-EXPOSURE C
-DESIGN LOADS DERIVED FROM THESE CODES AND FORCES
  -AXIAL - 180#
  -SHEAR - 270#
  -MOMENT - 1010#'
-USE CONCRETE WITH A 3000PSI MINIMUM COMPRESSIVE STRENGTH (f'c).
-PIER DEPTHS REQUIRED ARE MINIMUMS. ALL PIERS TO EXTEND TO FROST DEPTH AS DETERMINED BY LOCAL JURISDICTION.
-TOP OF PIERS SHALL BE SLOPED SUCH THAT MOISTURE CANNOT ACCUMULATE.
-ELECTRICAL CONTRACTOR TO PROVIDE INFORMATION ON CONDUIT AND ELECTRICAL REQUIREMENTS.
-MINIMUM ALLOWABLE LATERAL SOIL BEARING PRESSURE 100 PSF/FT OF DEPTH (x2)
-TOP 6" OF SOIL NEGLECTED IN EMBEDMENT DEPTH CALCULATIONS (EMBEDMENT DEPTHS SHOWN ARE FROM GRADE).
-PROVIDE A MINIMUM OF 3" CONCRETE COVER FOR ALL EMBEDDED STEEL.
-ALL REINFORCING STEEL BY GENERAL CONTRACTOR.

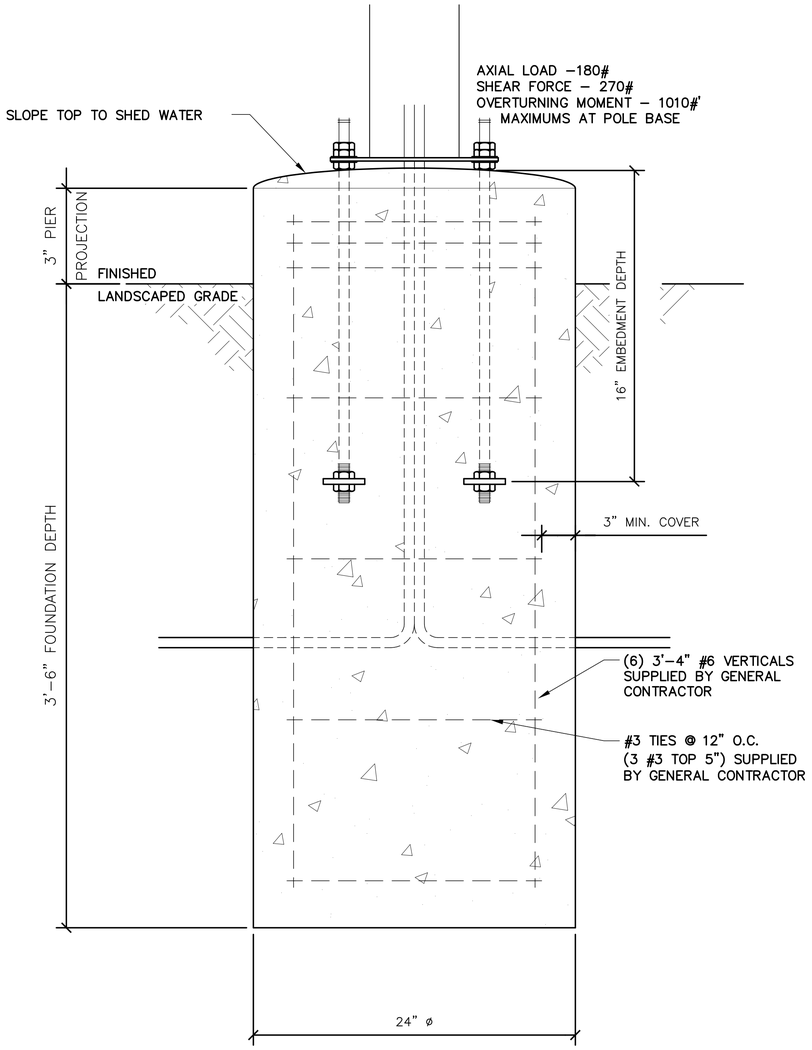

A DIRECTIONAL 115 MPH

NTS

NOTES:
-TOP OF PIERS SHALL BE SLOPED SUCH THAT MOISTURE CANNOT ACCUMULATE.
-USE F1554 GRADE 36 BOLTS MINIMUM
-USE HOT DIPPED GALVANIZED BOLTS
-ANCHOR BOLTS TO BE SET IN ACCORDANCE WITH AISC CODE OF STANDARD PRACTICE
-ANCHOR RODS, NUTS, AND WASHERS SHALL BE SHIPPED AS AN ASSEMBLY FROM THE SIGN/LIGHTING MANUFACTURER
-DO NOT CUT ANCHOR BOLTS AFTER INSTALLATION OF POLE

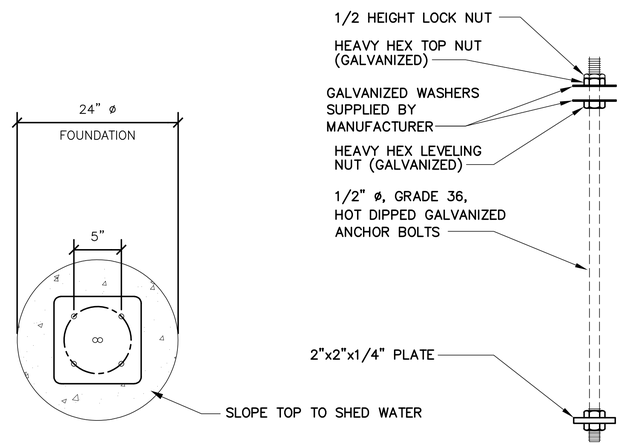

B ANCHOR BOLT PATTERN

NTS

NOTES:
-TOP OF PIERS SHALL BE SLOPED SUCH THAT MOISTURE CANNOT ACCUMULATE.
-ANCHOR RODS, NUTS, AND WASHERS SHALL BE SHIPPED AS AN ASSEMBLY FROM THE SIGN/LIGHTING MANUFACTURER
-DO NOT CUT ANCHOR BOLTS AFTER INSTALLATION OF POLE

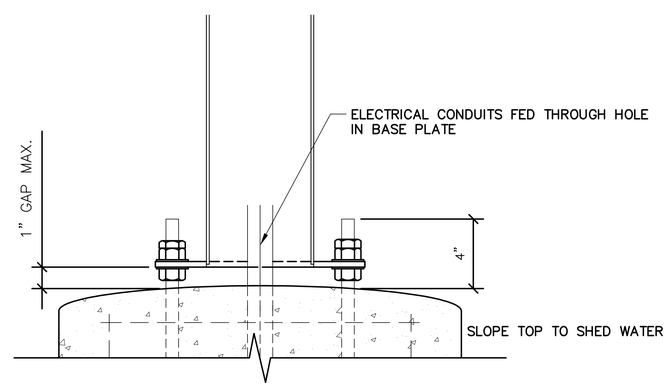

C CONNECTION DETAILS

NTS

GEN. NOTES

-THE FOLLOWING CODES WERE USED IN DESIGN:
  -IBC 2012
  -ASCE 7-10
  -ACI 318-11
  -AISC 360-11
  -AWS D1.3
  -WIND SPEED 115 MPH, 3 SEC GUST
  -EXPOSURE C
-DESIGN LOADS DERIVED FROM THESE CODES AND FORCES
  -AXIAL - 180#
  -SHEAR - 270#
  -MOMENT - 1010#'

-ALL FOOTING EXCAVATIONS ARE TO BE CLEAR OF WATER AND FOREIGN MATTER BEFORE PLACING CONCRETE
-MINIMUM ALLOWABLE LATERAL SOIL BEARING PRESSURE OF 100PSF/FT (x2)
-SITE SOIL CONDITIONS TO BE CONFIRMED BY GEOTECHNICAL ENGINEER. IF ASSUMED SOIL CONDITIONS ARE NOT PRESENT, FOUNDATION SHALL BE DESIGNED BY A LICENSED STRUCTURAL ENGINEER TAKING INTO ACCOUNT ACTUAL SITE SOIL CONDITIONS.
-TOP 6" OF SOIL NEGLECTED IN EMBEDMENT DEPTH CALCULATIONS (EMBEDMENT DEPTHS SHOWN ARE FROM GRADE)

-ELECTRICAL CONTRACTOR TO PROVIDE INFORMATION ON CONDUIT AND ELECTRICAL REQUIREMENTS.

CONCRETE:

-ALL FOOTINGS SHALL BEAR ON FIRM UNDISTURBED RESIDUAL SOIL AND/OR ENGINEERED EARTH FILL COMPACTED TO 98% OF ITS MAXIMUM DRY DENSITY AS PER ASTM D 698-70 (STANDARD PROCTOR) UNLESS NOTED OTHERWISE.
-ALL PIERS TO EXTEND TO FROST DEPTH AS DETERMINED BY LOCAL JURISDICTION.
-TOP OF PIERS SHALL BE SLOPED SUCH THAT MOISTURE CANNOT ACCUMULATE.
-MINIMUM CONCRETE STRENGTH (f'c) SHOULD CONFORM WITH MCDONALDS CAST-IN-PLACE CONCRETE SPECIFICATIONS SECTION 2.13-A
-USE OF ADMIXTURES SHALL CONFORM TO MCDONALDS CAST-IN-PLACE CONCRETE SPECIFICATION SECTION 2.6
-AIR ENTRAINMENT SHALL CONFORM WITH MCDONALDS CAST-IN-PLACE CONCRETE SPECIFICATION SECTIONS 2.6-A & 2.13-A
-WATER CONTENT RATIO SHALL CONFORM TO MCDONALDS CAST-IN-PLACE CONCRETE SPECIFICATIONS SECTION 2.13-A
-FOUNDATION CONCRETE TO BE TESTED PER MCDONALDS CAST-IN-PLACE CONCRETE SPECIFICATIONS SECTION 3.14
-PROVIDE A MINIMUM 3" OF CONCRETE COVER OVER ALL EMBEDDED STEEL.
-REINFORCEMENT PLACEMENT SHALL CONFORM TO MCDONALDS CAST-IN-PLACE CONCRETE SPECIFICATIONS SECTIONS 3.2 & 3.5. PERFORMED BY GENERAL CONTRACTOR.
-ANCHOR BOLTS TO BE SET IN ACCORDANCE WITH AISC CODE OF STANDARD PRACTICE
-DO NOT PLACE POLES ON CONCRETE UNTIL CONCRETE HAS CURED PER MCDONALDS CAST-IN-PLACE CONCRETE SPECIFICATION, SECTION 3.11-E.

STEEL:

-STEEL PIPE SECTION: ASTM A53 OR A252 TYPE E GRADE B (Fy = 35ksi)
-HSS ROUND SECTION: ASTM A500 GRADE B (Fy = 42ksi)
-HSS SQUARE/RECTANGULAR SECTIONS: ASTM A500 GRADE B (Fy = 46ksi)
-CONNECTION BOLTS A325
-STEEL ANGLES, CHANNELS, STRUCTURAL SHAPES AND PLATES: ASTM A36
-REINFORCEMENT: GRADE 60 - BY GENERAL CONTRACTOR
-NUTS: A563DH OR A194-2H
-WASHERS: ASTM F-436
-USE HOT DIPPED GALVANIZED BOLTS AND FASTENERS
-ANCHOR RODS, NUTS, AND WASHERS SHALL BE SHIPPED AS AN ASSEMBLY FROM THE SIGN/LIGHTING MANUFACTURER
-NO FIELD HEATING TO BEND STEEL SHALL BE ALLOWED WITHOUT ENGINEER'S APPROVAL.
-DO NOT CUT ANCHOR BOLTS AFTER INSTALLATION OF POLE
-AFTER INSTALLATION, ALL EXPOSED STEEL SHALL BE PAINTED WITH AN ENAMEL PAINT TO INHIBIT CORROSION.
-ANY FIELD WELDING SHALL FIRST BE VERIFIED BY ENGINEER AND PERFORMED IN ACCORDANCE WITH AWS D1.1.

-REFER TO SIGN MANUFACTURER DRAWINGS AND INSTRUCTIONS FOR ADDITIONAL INFORMATION.
-CONTRACTOR (INSTALLER) IS RESPONSIBLE FOR THE MEANS AND METHODS OF CONSTRUCTION IN REGARDS TO JOBSITE SAFETY.
-DETAILS AND STRUCTURAL MEMBERS NOT SHOWN DESIGNED BY OTHERS
-ANY MODIFICATIONS ARE TO BE VERIFIED BY AN ENGINEER

REV	DATE	DESCRIPTION	BY

STATE OF MISSOURI ROBERT E. POLK JR. NUMBER E-28837 REGISTERED PROFESSIONAL ENGINEER

DATE 2-5-19
THIS SHEET HAS BEEN SIGNED, SEALED, AND DATED ELECTRONICALLY

PREPARED BY:
Farnsworth GROUP
20 ALLEN AVENUE, SUITE 200
ST LOUIS, MISSOURI 63119
(314) 962-7000 / (314) 962-1253 Fax
www.fwi.com

PREPARED FOR:
McDonald's USA, LLC

© 2011 McDonald's USA, LLC
These drawings and specifications are the confidential and proprietary property of McDonald's USA, LLC and shall not be copied or reproduced without written authorization. The contract documents were prepared for use on this specific site in accordance with the plans and are not suitable for use on a different site or at a later time. Use of these drawings for reference or example on another project requires the express written consent of McDonald's USA, LLC. Reproduction of the contract documents for reuse on another project is not authorized.

DRAWN BY FP	STD ISSUE DATE JAN 2013
REVIEWED BY FP	DATE ISSUED JAN 2013

TITLE
STANDARD SITE DETAILS
DIRECTIONAL SIGN DETAIL

DESCRIPTION

SITE ID JAN 2013

SITE ADDRESS
STANDARD SITE DETAILS

SHEET NO.
SD10