ROYAL CITY BELL, LLC
A Franchisee of Taco Bell

TACO BELL

SUCCESSOR REMODEL
HERITAGE

STORE #34386

14880 S. HARRISON
OLATHE, KS

PROJECT GENERAL NOTES

A. ALL WORK SHALL CONFORM TO THE 2018 EDITION OF THE INTERNATIONAL BUILDING CODES AND ALL OTHER APPLICABLE CODES, STANDARDS, AND REGULATIONS OF THE CITY OF OLATHE AND COUNTY OF JOHNSON COUNTY, KANSAS.

B. IT IS INTENDED THAT A COMPLETE OCCUPIABLE BUILDING PROJECT IS PROVIDED.

C. THE GENERAL CONDITIONS OF THE CONTRACT FOR CONSTRUCTION ARE A PART OF THESE CONTRACT DOCUMENTS. A COPY IS ON FILE AT THE ARCHITECT'S OFFICE.

D. DO NOT SCALE THESE DRAWINGS. VERIFY ALL DIMENSIONS AND CONDITIONS IN THE FIELD. ANY DISCREPANCIES IN THESE DRAWINGS SHALL BE BROUGHT TO THE ATTENTION OF THE ARCHITECT PRIOR TO STARTING WORK.

E. ALL PROPOSED SUBSTITUTIONS SHALL BE APPROVED BY THE OWNER'S CONSTRUCTION MANAGER, IN WRITING, PRIOR TO INSTALLATION.

F. RETAIN A PROJECT GEOTECHNICAL ENGINEER TO PROVIDE OBSERVATION AND TESTING SERVICES DURING THE GRADING (INCLUDING UTILITY TRENCHES) AND FOUNDATION PHASE OF CONSTRUCTION AS RECOMMENDED IN THE GEOTECHNICAL REPORT. ALL TESTING AND INSPECTION REPORTS, INCLUDING FINAL SUMMATION LETTER, SHALL BE SUBMITTED TO THE BUILDING DEPARTMENT AND OWNER. G.C. SHALL CERTIFY PAD ELEVATION PRIOR TO START OF FOUNDATION WORK.

G. SUBMIT PAY FEES AND OBTAIN ALL PERMITS ASSOCIATED WITH THE PROJECT EXCEPT GENERAL BUILDING PERMIT. THIS INCLUDES, BUT IS NOT LIMITED TO ELECTRICAL, MECHANICAL, PLUMBING, FIRE SPRINKLER, HOOD ANSUL, OR OTHER RELATED FIRE PERMITS, ENCROACHMENT PERMIT, ETC. OWNER WILL PAY FOR "CONNECTION FEES" ASSOCIATED WITH UTILITY PERMITS. PAY FOR TEMPORARY FACILITIES FEES AS REQUIRED TO COMPLETE THE WORK IN A TIMELY MANNER.

H. PROVIDE EACH SUBCONTRACTOR WITH A COMPLETE AGENCY-PERMITTED DRAWING SET AT TIME OF CONSTRUCTION.

I. ALL ABBREVIATIONS INCLUDED FOLLOW INDUSTRY STANDARDS. CONTACT ARCHITECT IF ANY ABBREVIATIONS ARE NOT CLEAR.

J. GC SHALL SUPPLY AND INSTALL ALL ASPECTS OF THE PROJECT DESCRIBED IN THIS DRAWING SET UNLESS OTHERWISE NOTED. SEE SCOPE OF WORK FOR EXCEPTIONS.

K. GRAPHIC AND WRITTEN INFORMATION ON DRAWINGS SHALL BE COORDINATED WITH ALL TRADES PRIOR TO INSTALLATION.

L. SCOPE OF WORK AND SPECIFICATIONS DOCUMENTS ARE INCLUDED AS CONTRACT DOCUMENT FOR THIS PROJECT. IF THEY HAVE NOT BEEN PROVIDED TO YOU FOR THIS PROJECT PLEASE ASK THE OWNER OR THE OWNER'S REPRESENTATIVE FOR A COPY OF THE APPLICABLE SECTIONS.

M. GC SHALL PROVIDE WARRANTY DOCUMENTATION FOR ANY ROOFING MEMBRANE AND EIFS WORK PERFORMED ON PROJECT AT THE CONCLUSION OF THE PROJECT

REFERENCE SYMBOLS

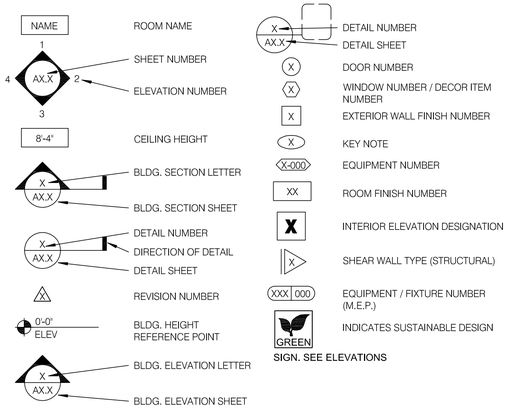

SCOPE NOTES (RI)
WORK REQUIRED TO BRING STORE UP TO CURRENT REMODEL IMAGE STANDARDS.

ADA NOTES (AD)
WORK REQUIRED TO MAKE STORE 100% ADA COMPLIANT.

CUSTOMER TOUCH POINT (CT)
WORK REQUIRED BY FACILITIES / OPERATIONS TO MEET CURRENT OPERATIONAL STANDARDS.

REFER TO STRUCTURAL, MECHANICAL, PLUMBING AND ELECTRICAL SHEETS FOR SPECIFIC SYMBOLS

PROJECT SUMMARY

PROJECT DESCRIPTION:

EXTERIOR FACADE MODIFICATIONS, ACCESSIBILITY CHANGES TO RESTROOMS, NEW INTERIOR AND EXTERIOR FINISHES, NEW DINING ROOM FURNITURE AND DRIVE-THRU FURNITURE.

2018 INTERNATIONAL BUILDING CODE - (ORDINANCE 19-27)
2018 INTERNATIONAL PLUMBING CODE - (ORDINANCE 19-30)
2018 INTERNATIONAL MECHANICAL CODE - (ORDINANCE 19-31)
2018 INTERNATIONAL FUEL GAS CODE - (ORDINANCE 19-32)
2017 NATIONAL ELECTRICAL CODE – NFPA 70 - (ORDINANCE 19-33)
2018 INTERNATIONAL ENERGY CONSERVATION CODE - (ORDINANCE 19-34)
2018 INTERNATIONAL FIRE CODE - (ORDINANCE 19-37)
2009 ACCESSIBLE AND USABLE BUILDINGS AND FACILITIES ICC/ANSI A1117.

LEGAL JURISDICTION: CITY OF OLATHE, KS

BUILDING AREA: 2,605 S.F. SEATING: 66

OCCUPANCY: A2

TYPE CONSTRUCTION: TYPE VB

DESIGN CRITERIA

REFER TO STRUCTURAL SHEETS

PROJECT DIRECTORY

OWNER
ROYAL CITY BELL
3225A S. RAINBOW BLVD., SUITE #102
LAS VEGAS, NV 89146

ARCHITECT
GLMV ARCHITECTURE
1525 E. DOUGLAS AVE.
WICHITA, KS, 67211
Contact: ROSA GADDY
Phone: 316-265-9367

CONSTRUCTION MANAGER
FIRST STREET DEVELOPMENT
4455 CAMELBACK ROAD, STE. 241
PHOENIX, AZ 85018
CONTACT: CHRIS CZYZ
PHONE: 602.295.6247

MECH. / ELEC. ENGINEER
BC ENGINEERS, INC
5720 REEDER
SHAWNEE, KS 66203
Contact: STEPHEN McGOWAN
Phone: 913262.1772

SHEET INDEX

TITLE/GENERAL		
T1.0	TITLE SHEET	1 2 3 4 5
SITE		
SP101	SITE PLAN	1 2 3 5
SP102	SITE PLAN	3 5
SP501	DRIVE-THRU EQUIPMENT DETAILS	3
SP502	SITE DETAILS	3 5
SL101	SITE LIGHTING PLAN	3 5
LP101	LANDSCAPE PLAN	1 2 3 5
DEMO		
D1.0	DEMOLITION FLOOR PLAN	3
D3.0	DEMOLITION EXTERIOR ELEVATION	3
ARCHITECTURE		
A1.0	FLOOR PLAN	3 5
A1.1	DOOR SCHEDULE	1 3
A2.0	SEATING AND EQUIPMENT PLAN	3 4 5
A4.0	EXTERIOR ELEVATION	3 5
A4.1	EXTERIOR ELEVATION	3 5
A6.0	FINISH AND CONSTRUCTION DETAILS	3
A7.0	FLOOR FINISH PLAN	3 5
A7.1	REFLECTED CEILING PLAN	3 4 5
A7.2	FINISH LEGEND AND SCHEDULE	3
A8.0	INTERIOR ELEVATIONS DINING ROOM	3
A8.1	INTERIOR ELEVATIONS AND RESTROOM PLAN	3 5
ACCESSIBILITY		
ADA1.0	ACCESSIBILITY REQUIREMENTS	3
MECHANICAL/PLUMBING/ELECTRICAL		
MP0.0	MECH/PLUMB SPECIFICATIONS	3
MP1.0	MECH/PLUMB PLANS	1 3
E0.0	ELECTRICAL SPECIFICATIONS	3
E1.0	ELECTRICAL LIGHTING PLAN	3 4
E2.0	ELECTRICAL POWER PLAN	3
E3.0	ELECTRICAL SITE LIGHTING PLAN	3

VICINITY MAP

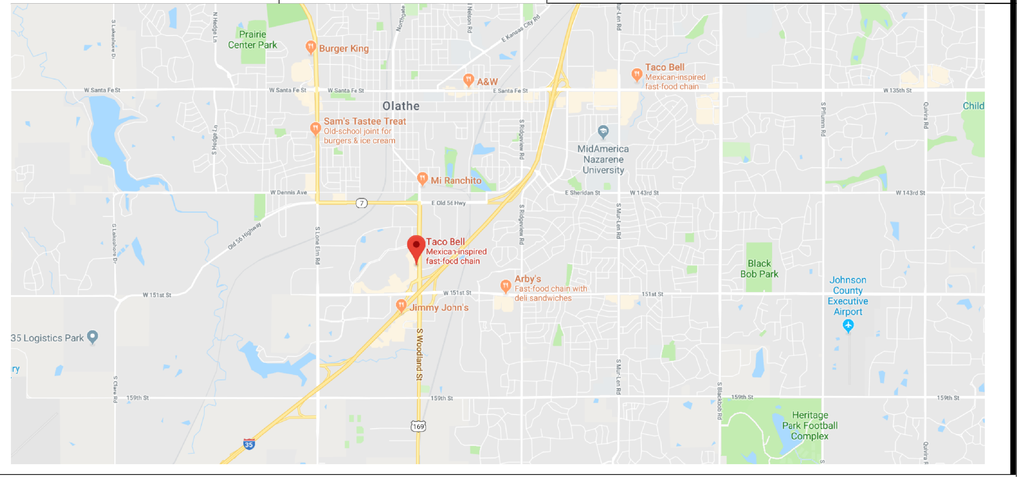

GLMV ARCHITECTURE PLLC
1525 E. Douglas Wichita, KS 67211
Tel: (316) 265-9367 Fax: (316) 265-5646
www.glmv.com

MARK D. McGUIGGAN LICENSED 2511 KANSAS PROFESSIONAL ARCHITECT

09-17-2020

18071.18005

1	06.20.19	RTC
2	07.16.19	PER CITY COMMENTS
3	08.03.20	UPDATED BLDG. CODE
4	08.18.20	REVISED SEATING
5	09.10.20	RTC

CONTRACT DATE:	04.29.19
BUILDING TYPE:	SUCCESSOR
PLAN VERSION:	DEC 2017
BRAND DESIGNER:	DY
SITE NUMBER:	
STORE NUMBER:	34386

TACO BELL
14880 S. HARRISON
OLATHE, KS

ROYAL CITY BELL, LLC
A Franchisee of Taco Bell

SUCCESSOR
HERITAGE

TITLE SHEET

T1.0

PLOT DATE:

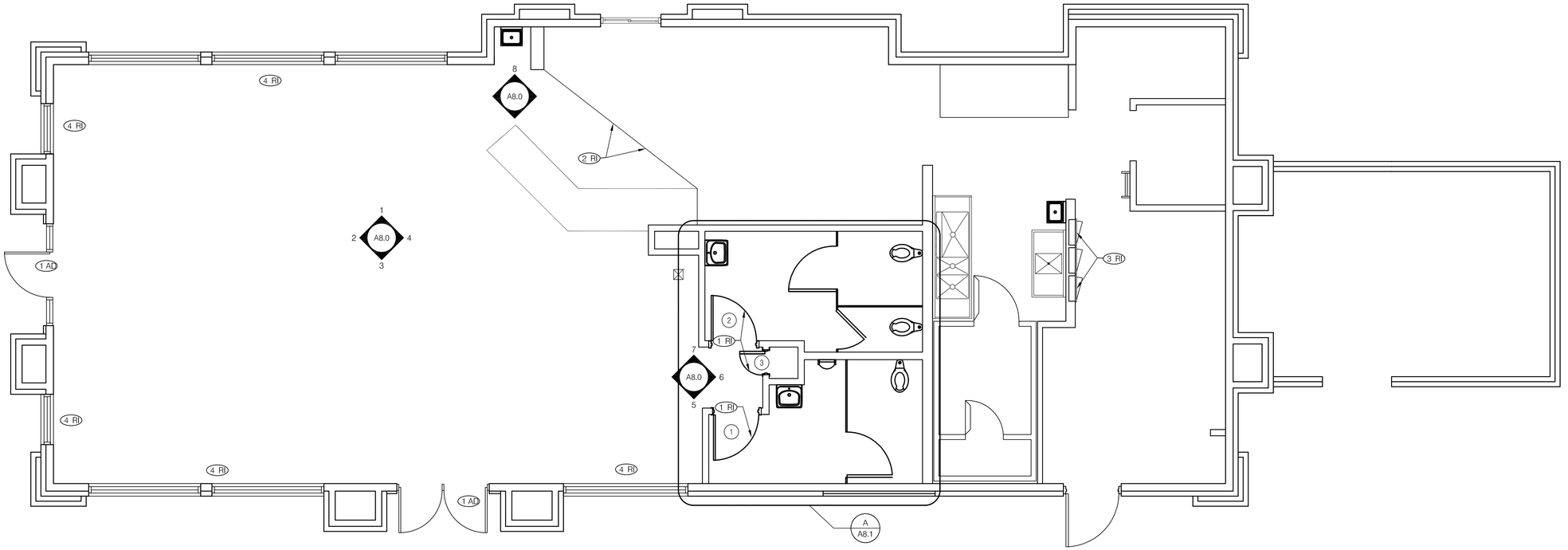

FLOOR PLAN 1/4"=1'-0" A

TYPICAL EXISTING WALL

TYPICAL NEW INTERIOR WALL:
2x4 WD STUDS (2X6 WHERE NOTED) AT 16" O.C. W/ 1/2" GYP. BD. SUBSTRATE U.O.N. USE MOISTURE RESISTANT GYP. BD. BEHIND ALL CERAMIC WALL TILE. U.O.N.
ACCEPTABLE ALTERNATE:
METAL STUDS IN LIEU OF WOOD STUDS.

TYPICAL PARTIAL HEIGHT WALL:
2x4 WD STUDS AT 16" O.C. W/ 1/2" GYP. BD. SUBSTRATE U.O.N.
ACCEPTABLE ALTERNATE:
METAL STUDS IN LIEU OF WOOD STUDS.

TYPICAL EXTERIOR WALL:
2x6 STUDS @ 16" O.C. w/ 1/2" EXTERIOR GRADE SHEATHING. WALL STUDS SHALL BE CONTINUOUS.

WALL LEGEND F

DECOR:
A. SEE A2.0 FOR FF&E PLAN
B. SEE A7.0 FOR FLOOR FINISHES
C. SEE A7.1 FOR CEILING FINISHES.
D. SEE A8.0-A8.1 FOR WALL FINISHES

GENERAL:
A. DRAWINGS ARE BASED UPON WOOD FRAMING. UTILIZATION OF METAL STUDS ON NON-BARING INTERIOR PARTITIONS, BULKHEADS AND SOFFITS IS ACCEPTABLE.
B. ALL ATTACHMENTS MADE THROUGH E.I.F.S. SHALL BE BUSHED TO PREVENT DAMAGE TO THE FINISH.
C. ALL PENETRATIONS THROUGH E.I.F.S. SHALL BE SEALED USING MFR'S. APPROVED METHOD

DIMENSIONS:
A. DIMENSIONS THAT ORIGINATE FROM EXISTING ELEMENTS OF THE BUILDING ARE FROM FACE OF FINISH.
B. ALL OTHER DIMENSIONS ARE TO FACE OF STUD U.O.N. REFER TO FOUNDATION PLAN FOR FACE OF CONC. DIMENSIONS.
DIMENSIONS NOTED AS "CLEAR" OR " HOLD" ARE MIN. REQUIRED NET CLEARANCE FROM FACE OF OUTERMOST FINISH (WALL, BASE, CHAIR RAIL).

WINDOWS / DOORS:
A. SEE SCHEDULE FOR WINDOW AND DOOR TYPES.
B. ALL DOOR AND WINDOW OPENINGS DIMENSIONS ARE TO ROUGH OPENING.

FINISH SUBSTRATES:
A. PROVIDE 1/2" THICK CEMENTITIOUS BD. FROM FLOOR SLAB TO 12" A.F.F. MIN. IN LIEUOF GYP. BD. AT ALL WALLS EXCEPT SHEAR WALL SURFACES U.O.N.
B. ALL JOINTS, GAPS OR SPACES LEADING TO ALL HOLLOW OR INACCESSIBLE SPACES SHALL BE SEALED WITH "NSF INTERNATIONAL" APPROVED SEALANTS.

FLOOR PLAN NOTES D

5 REMODEL IMAGE (RI)

1 RI NEW DOOR FRAMES AND HARDWARE. SEE A1.1

2 RI ERECT PLYWOOD DUST BARRIER WITH SWING GATE TO PROTECT KITCHEN DURING CONSTRUCTION.

3 RI EXISTING ELECTRICAL MAIN SWITCH BOARD. REFER TO ELECT. DWGS.

4 RI REINSTALL OR REPLACE SUBSTRATE BELOW WINDOWS AFTER FRAMING INSPECTION.

ADA NOTES (AD)

1 AD VERIFY STOREFRONT AND THRESHOLD COMPLIES WITH ADA REQUIREMENTS. REPLACE IF NECESSARY.

KEY NOTES B

GLMV ARCHITECTURE, PLLC
1525 E. Douglas Wichita, KS 67211
Tel: (316) 265-9387 Fax: (316) 265-5646
www.glmv.com

MARK D. McCLUGGAGE LICENSED 2511 KANSAS PROFESSIONAL ARCHITECT
09-17-2020

18071.18005

3	08.03.20	UPDATED BLDG. CODE
5	09.10.20	RTC

CONTRACT DATE:	04.29.19
BUILDING TYPE:	SUCCESSOR
PLAN VERSION:	DEC 2017
BRAND DESIGNER:	DY
SITE NUMBER:	
STORE NUMBER:	34386

TACO BELL
14880 S. HARRISON
OLATHE, KS

ROYAL CITY BELL, LLC
A Franchisee of Taco Bell

SUCCESSOR HERITAGE

FLOOR PLAN

A1.0

PLOT DATE:

DOOR NO.	ROOM NAME	QTY.	DOOR SIZE			Type	Door Material	Frame Material	BUTTS	LOCKS		CLOSERS	KICK PLATE	DOOR STOP	PUSH / PULL		MISCELLANEOUS			DOOR NOTES
			Width	Height	Thickness				1 1/2 PR BOMMER BB5000 4-1/2" X 4-1/2"	YALE B-PB5405 LNIC 626	FALCON D271 (OCC. INDICATING DEADBOLT)	DORMA 7414 ARP SNB 689	STAINLESS STEEL 10" x 34"	FLOOR STOP - ROCKWOOD 441 CU	PUSH PLATE ROCKWOOD 70F - 8" X 16"	PULL PLATE ROCKWOOD 70C X 107 - 4"X16"	UNDERCUT 3/4"	COAT HOOK - BOBRICK	DOOR SIGN	
1	RESTROOM DOOR	1	3' - 0"	7' - 0"	0' - 2"	TYPE B	WD	HM	X		X	X	X	X	X	X	X	X	X	1, 2, 3, 4, 5, 6, 7, 10, 11
2	RESTROOM DOOR	1	3' - 0"	7' - 0"	0' - 2"	TYPE B	WD	HM	X		X	X	X	X	X	X	X	X	X	1, 2, 3, 4, 5, 6, 7, 10, 11
3	CLOSET DOOR	1	1' - 0"	6' - 8"	0' - 2"	TYPE C	WD	HM	X	X			X	X			X			1, 4, 7, 11, 12, 13

DOOR SCHEDULE 1

NOTE -
1. ALL DOOR HARDWARE SHALL COMPLY WITH DISABLED ACCESS REQUIREMENTS

2. THE BOTTOM 10" OF ALL DOORS SHALL HAVE A SMOOTH UNINTERRUPTED SURFACE

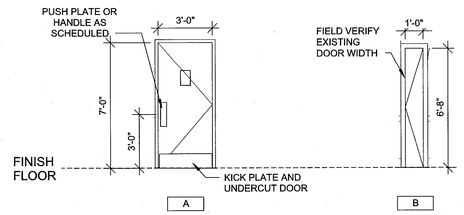

DOOR TYPES N.T.S. 2

1. LAMINATE DOORS. SEE INTERIOR ELEVATIONS
2. MOUNT DOOR CLOSERS ON RESTROOM OR KITCHEN SIDE ONLY.
3. MOUNT KICK PLATE ON PUSH SIDE ONLY.
4. ADJUST DOOR CLOSER. MAXIMUM DOOR OPERATING PRESSURE : 5 LBS INTERIOR : 8.5 LBS EXTERIOR MEASURED AT 90 DEGREES TO THE DOOR AT THE STRIKE SIDE EDGE. DOOR CLOSERS SHALL BE ADJUSTED SO THAT FROM AN OPEN POSITION OF 90 DEGREES, THE TIME REQUIRED TO MOVE THE DOOR TO A POSITION OF 12 DEGREES FROM THE LATCH IS 5 SECONDS MINIMUM.
5. ADA COMPLIANT ACCESSIBILITY SIGNAGE WHERE REQUIRED (OR AS REQUIRED BY LOCAL JURISDICTION) - (1) MEN; (1) WOMEN; (2) EXIT.
6. RESTROOM SIGN IF REQUIRED. VERIFY LOCAL REQUIREMENTS.
7. FRAMES SHALL BE PAINTED.
8. DOOR FRAME SHALL HAVE REMOVABLE DOOR STOPS.
9. PROVIDE LATCH AND STRIKE PLATE HARDWARE BY DOOR MFR. TO BE COMPATIBLE WITH LOCKS
10. REPLACE CLOSET DOOR AND FRAME IF IN POOR CONDITION. FIELD VERIFY DIMENSIONS
11. HARDWARE:
    BUTTS: 1 1/2 PR BOMMER BB5000, 4-1/2" x 4-1/2"
    CLOSER: DORMA 7414 ARP SNB 689
    DOOR STOP: HINGE STOP - ROCKWOOD 532.NP
    PULL PLATE: ROCKWOOD 70C x 107 - 4" x 16"
    FINISH: DL-1
12. STOREFRONT DOOR PANIC HARDWARE SHALL BE : DOR-O-MATIC 2092 RIM PANIC HARDWARE AND EXTERIOR PULLS WITH QUALITY #520 DOOR PULL.

DOOR SCHEDULE NOTES 3

GLMV ARCHITECTURE, P.L.L.C
1525 E. Douglas Wichita, KS 67211
Tel.: (316) 262-2697 Fax: (316) 263-5846
www.glmv.com

MARK D. VONFELDT LICENSED 25111 KANSAS PROFESSIONAL ARCHITECT

18071.18005

3. 08.03.20	UPDATED BLDG. CODE

CONTRACT DATE: 04.29.19
BUILDING TYPE: SUCCESSOR
PLAN VERSION: DEC 2017
BRAND DESIGNER: DY
SITE NUMBER:
STORE NUMBER: 34386

TACO BELL
14880 S. HARRISON
OLATHE, KS

ROYAL CITY BELL, LLC
A Franchisee of Taco Bell

SUCCESSOR
HERITAGE

DOOR SCHEDULE

A1.1

PLOT DATE: 11/13/2018 11:32:49 AM

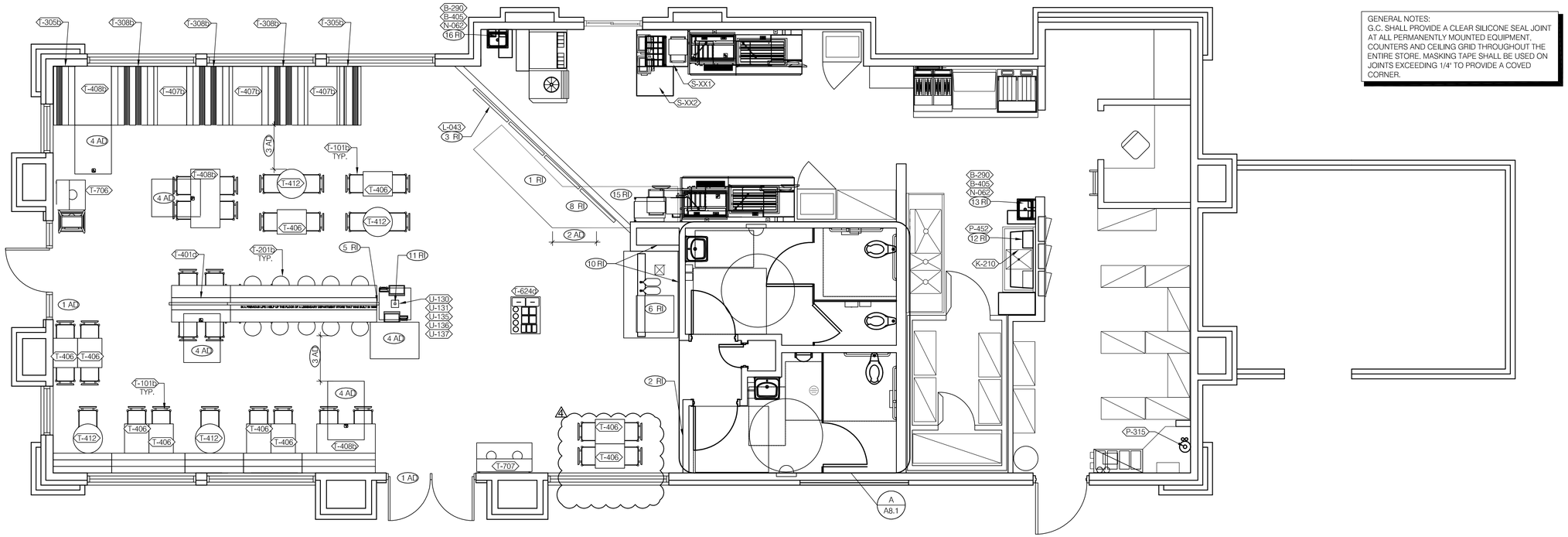

GENERAL NOTES:
G.C. SHALL PROVIDE A CLEAR SILICONE SEAL JOINT AT ALL PERMANENTLY MOUNTED EQUIPMENT, COUNTERS AND CEILING GRID THROUGHOUT THE ENTIRE STORE. MASKING TAPE SHALL BE USED ON JOINTS EXCEEDING 1/4" TO PROVIDE A COVED CORNER.

NEW EQUIPMENT SCHEDULE

NO.	QTY	G.C. INST.	ITEM DESCRIPTION	MFR. & MODEL NUMBER	PLUMB	ELECT	GAS	REMARKS	NO.
			B CONTRACTOR BUILDING ELEMENTS						
S-481	1	X	CUP DISPENSER *	A.J. ANTUNES #DACS50					S-481
K-490	2	X	FRONT COUNTER SHELVING 18" x 24" x 24" (2 TIER) *	ISS #WST440Y				UNDERCOUNTER SHELVING	K-490
L-043	1	X	INTERIOR MENU BOARD PACKAGE	STRATACACHE LG 43 DISPLAY		X		DIGITAL MENU BOARD	L-043
L-132	1	X	ACCESSIBLE SIGNAGE	E76000930				SIGN, TACO BELL, RESTROOM, WOMEN, W/BRAILLE	L-132
L-133	1	X	ACCESSIBLE SIGNAGE	E76000931				SIGN, TACO BELL, RESTROOM, MEN, W/BRAILLE, 10"X6 1/2"	L-133
N-146	2	X	LAVATORY FAUCET	SLOAN #SF-2350	X			OWNER PROVIDED	N-146
B-265	2	X	MIRROR, 18" X 36"	BOBRICK #B-165-1836				SURFACE MTD	B-265
B-275	2	X	TOILET PAPER DISPENSER	BOBRICK #B-2890				SURFACE MTD	B-275
B-290	2	X	PAPER TOWEL DISPENSER	BOBRICK #B-262				SURFACE MTD.	B-290
B-300	2	X	GRAB BAR 1-1/2"DIA X 36" S.S. FIN.	BOBRICK #B6806X36				SURFACE MTD	B-300
B-305	2	X	GRAB BAR 1-1/2"DIA X 42" S.S. FIN.	BOBRICK #B6806X42				SURFACE MTD	B-305
B-310	2	X	GRAB BAR 1-1/2"DIA X 18" S.S. FIN.	BOBRICK #B6806X18				SURFACE MTD	B-306
B-410	1	X	SANITARY NAPKIN RECEPTACLE	RUBBERMAID #6140				INCLUDES ACCESSORY KIT & MOUNTING HARDWARE	B-410
K-210	1	X	PREP SINK WORKSTATION 50" TRACK	ISS #WST255E				WALL TRACK SHELVING	K-210
N-061	2	X	HAND SINK (KITCHEN)	AERO #HSK-A	X			15"W x 17"L - 10"x14", FRONT TO BACK x 5"D, INCLUDES	N-061
P-315	1	X	REVERSE OSMOSIS SYSTEM	3M - CFSM1254	X			REQUIRES FLOOR SINK	P-315
P-452	1	X	HOT WATER SYSTEM	BUNN-MACHINE #43600.0014	X	X		W/ BRACKET, FRONT MOUNT:	P-452
S-XX1	1	X	PICK-UP DRIVE-THRU COUNTER (30" x 42")	ISS #WST 1344Y					S-XX1
S-XX2	1	X	STAINLESS STEEL WORKTABLE (24" X 30")	ISS #WST					S-XX2

NO.	QTY	G.C. INST.	ITEM DESCRIPTION	MFR. & MODEL NUMBER	PLUMB	ELECT	GAS	REMARKS	NO.
			B CONTRACTOR BUILDING ELEMENTS						
U-130	1		KIOSK TOWER					ONE PER STORE. FOR KIOSK COUNT REFER TO DIGITAL	U-130
U-131	2		MOUNTING PLATE					ONE PER KIOSK TABLET	U-131
U-135	2		KIOSK TABLET			X		DEDICATED CIRCUIT AND (2) CAT6 CABLES PER TABLET	U-135
U-136	2		VERIFONE (CREDIT CARD MACHINE)			X		1 PER KIOSK TABLET	U-136
U-137	1		STORM AUDIO-NAV KEYPAD			X		1 PER STORE; CALIFORNIA STORES 50% OF TOTAL TABLETS	U-137

SEATING PLAN 1/4"= 1'-0" | **A**

FURNITURE/DECOR SCHEDULE

EQ #	Count	Description
T-101b	32	CHAIR - WOOD SEAT / METAL BACK
T-201b	10	29" BAR STOOL
T-305b	2	SINGLE 48" BOOTH
T-308b	3	DOUBLE 48" BOOTH
T-401d	1	14' HUB TABLE ADA
T-406	10	24"X20" TABLE TOP AND CLAW BASE
T-407b	3	24"X48" TABLE TOP AND BASE
T-408b	3	24"X48" TABLE TOP AND BASE - ADA
T-412	4	24" DIA ROUND TABLE AND CLAW BASE
T-624d	1	CONDIMENT BIN
T-706	1	SINGLE TRASH RECEPTACLE
T-707	1	DOUBLE TRASH RECEPTACLE
Z-301b	4	SINGLE REVERSIBLE BOOTH END PANEL
Z-302b	6	DOUBLE REVERSIBLE BOOTH END PANEL
Z-303b	2	BACK PANEL

SEATING PACKAGE (TOTAL SEATS = 66) | **E**

ARTWORK SCHEDULE

EQ#	Count	Description	Remarks
G-201	1	ARRANGEMENT #1	SEE-A8.0

ARTWORK SCHEDULE | **D**

EQUIPMENT PLAN NOTES
1. "HOLD" DIMENSIONS ARE FROM FACE OF FINISH.
2. G.C. TO CONFIRM "HOLD" DIMENSIONS WITH EQUIPMENT MFR / VENDOR.
3. TILE CHIPPING AROUND CORE DRILL HOLES FOR SEATING WILL NOT BE ACCEPTED.
4. ALL DIMENSIONS FOR SEATING / CORE DRILL PLAN SHALL BE FROM FACE OF GYP BD.
5. VERIFY ALL DIMENSIONS WITH SEATING VENDOR PRIOR TO INSTALLATION.
6. REFER TO SCOPE OF WORK FOR RESPONSIBILITES
7. SEE INTERIOR ELEVATIONS A8.0-A8.1 FOR LOCATION OF SEATING VENDOR SUPPLIED ARTWORK.
8. PROVIDE THE FOLLOWING HARDWARE FOR EACH CABINET DOOR:
   KNOB: STANLEY 4482 (1 EA)
   CATCH: STANLEY SP35 (1 EA)
   HINGE: STANLEY 1588 (2 EA)
9. (H) - SYMBOL DENOTES A HIGH TABLE OR DINING COUNTER WITH STOOLS.
10. PROVIDE THE FOLLOWING HARDWARE FOR HAND SINK
    HAND SINK: AERO #HS-MOD / FAUCET: T&S FAUCET B-2456-W
11. ALL SOLID SURFACES TO BE PROPERLY SEAMED PER MANUFACTURERS SPECIFICATIONS
12. PAINT UNDERSIDE OF SERVICE COUNTER WITH WHITE GLOSS PAINT. AND PROVIDE METAL ANGLE LEDGER FOR END OF COUNTER IF VENDOR DOES NOT PROVIDE ONE.

- SYMBOL DENOTES A HANDICAP ACCESSIBLE TABLE.

SEATING PLAN NOTES | **C**

REMODEL IMAGE (RI)

1 RI EXISTING POS COUNTER TO REMAIN. PREP CUSTOMER FACING SURFACES FOR NEW FINISHES. RESURFACE/REPLACE COUNTERTOP AS REQUIRED. REFER TO A7.2 FOR FINISHES.

2 RI CORNER GUARD. SEE DETAIL 10/A6.0.

3 RI NEW DIGITAL MENUBOARDS. CENTER ON MENUBOARD BULKHEAD. SEE 14/A6.0

4 RI FRAMED ARTWORK. SEE ELEVATIONS SHEET A8.1 FOR SIZE AND LOCATION.

5 RI HUB TABLE POWER PROVIDED FROM CEILING. RUN FLEX CABLE WIRING TO AND THROUGH CHASE DOWN TUBE TO JUNCTION BOX ON UNDERSIDE OF TABLE.

6 RI REINSTALL EXISTING PEPSI AND ICE MACHINES AND TEA URN ON EXISTING DRINK TABLE.

7 RI NOT USED.

8 RI RELOCATE SAFE AS NEEDED FOR COUNTER WORK

9 RI NOT USED

10 RI FOR EXTENT OF WALL TILE REFER TO INTERIOR ELEVATIONS.

11 RI ROUTE POWER AND DATA FOR KIOSK TOWER FROM CEILING AND DOWN THROUGH WIRE CHASE PROVIDED BY FURNITURE VENDOR.

12 RI REPLACE EXISTING HANDSINK WITH NEW SS TYPE

13 RI NEW 2ND BUNN UNIT

14 RI RELOCATE BNB FOR FRUITISTA

15 RI NEW SOLID SURFACE EXTEND TO I-LINE

16 RI NEW HANDSINK

ADA NOTES (AD)

1 AD PROVIDE TACTILE EXIT SIGN AT EGRESS DOOR PER "TACTILE SIGN" DETAIL ON ADA1.0 WHEN EXISTING IS NOT PROVIDED.

2 AD 36" MIN CLEAR COUNTERTOP, 34" A.F.F REQUIRED PER ADA./

3 AD MAINTAIN MINIMUM 36" CLEAR ACCESSIBLE AISLE, 32" AT DOORWAYS AND CASED OPENINGS, 42" MIN. EGRESS PATH ALONG ROUTES WITH ACCESSIBLE SEATING PREFERRED

4 AD 30" x 48" CLEAR FLOOR SPACE FOR HANDICAP SEATING POSITION.

KEY NOTES | **B**

GLMV ARCHITECTURE, PLLC
1535 Dublin Street, Suite 100
Columbus, OH 43201
Tel: (310) 205-5307 Fax: (310) 265-5046
www.glmv.com

MARK D. McCLUGAGE LICENSED 2511 KANSAS PROFESSIONAL ARCHITECT

09-17-2020

18071.18005

1	06.20.19	RTC
2	08.03.20	UPDATED BLDG. CODE
3	08.18.20	REVISED SEATING
4	09.10.20	RTC

CONTRACT DATE: 04.29.19
BUILDING TYPE: SUCCESSOR
PLAN VERSION: DEC 2017
BRAND DESIGNER: DY
SITE NUMBER:
STORE NUMBER: 34386

TACO BELL
14880 S. HARRISON
OLATHE, KS

ROYAL CITY BELL, LLC
A Franchisee of Taco Bell

SUCCESSOR
HERITAGE

SEATING PLAN

A2.0

PLOT DATE:

APPLICATOR MUST DO THEIR DUE DILIGENCE WITH PREPARATION.

PRIMER: 1 COAT SW A24W1100, LOXON CONDITIONER
PRIMER: 2 COATS SW A82-100 SERIES, A-100 EXTERIOR LATEX SATIN

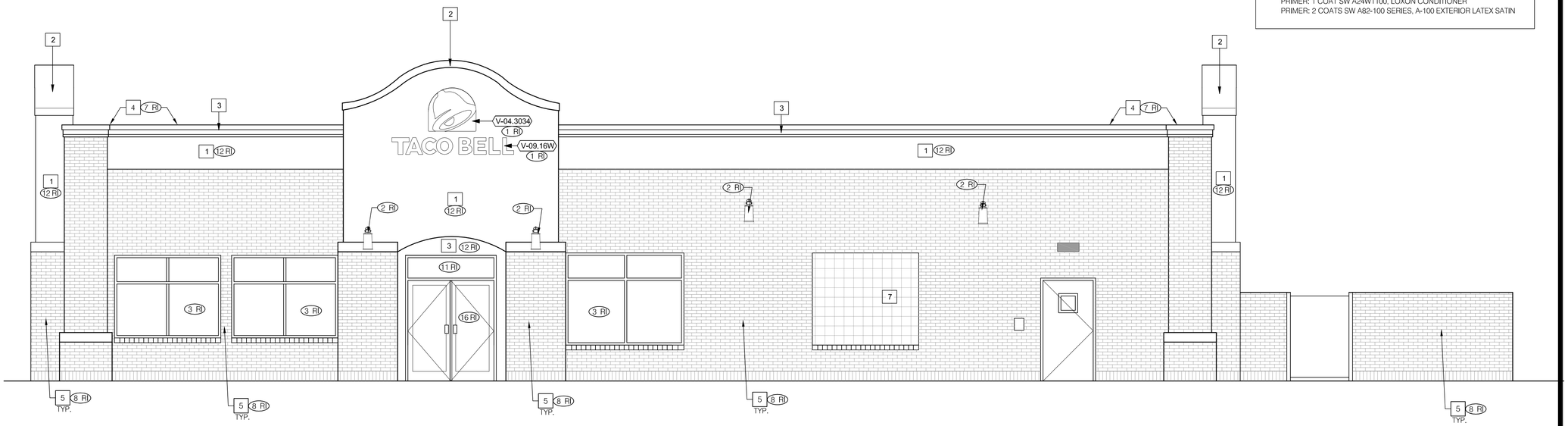

RIGHT SIDE ELEVATION 1/4" = 1'-0" | **A**

NOT USED N.T.S. | **I**

NOT USED N.T.S. | **G**

NOT USED N.T.S. | **E**

SIGN SCHEDULE

EQ #	Count	Description	Elec
V-04.3034	3	MEDIUM SWINGING BELL - PURPLE LOGO - COLOR CHANGING - 3'-0" X 3'-4"	
V-09.16W	3	MEDIUM TB 14" CHANNEL LETTES - WHITE - LINEAR	

SIGN SCHEDULE N.T.S. | **D**

NOT USED N.T.S. | **D1**

NOT USED N.T.S. | **B**

E.I.F.S SHALL MEET THE PERFORMANCE CHARACTERISTICS REQUIRED IN ASTM E 2568

E.I.F.S. WITH DRAINAGE SHALL HAVE 90 PERCENT DRAINAGE EFFICIENCY WHEN TESTED IN ACCORDANCE WITH THE REQUIREMENTS OF ASTM E 2273

E.I.F.S. SHALL COMPLY WITH SECTION 1403 OF THE IBC

WATER RESISTIVE BARRIER SHALL COMPLY WITH SECTION 1404.2 OF THE IBC AND ASTM E 2570

INSTALLATION SHALL COMPLY WITH E.I.F.S. MANUFACTURERS INSTRUCTIONS AND THE PROVISIONS OF SECTIONS 1704.1 AND 1704.14 OF THE IBC.

USE DETAIL 13/A6.0 WHEN MOUNTING SIGNAGE, AWNING, ETC. THROUGH E.I.F.S. FINISH AT WALLS.

E.I.F.S. NOTES N.T.S. | **B1**

EXTERIOR FINISH SCHEDULE

SYMBOL	AREA	MANUFACTURER	COLOR	ALTERNATE MFR.	ALTERNATE MATERIAL COLOR	REMARKS
1	MAIN WALL COLOR	SHERWIN WILLIAMS	PAINT SW2829 CLASSICAL WHITE	-	-	
2	ACCENT WALL	SHERWIN WILLIAMS	PAINT SW7027 WELL-BRED BROWN	-	-	
3	E.I.F.S. TRIM BAND	SHERWIN WILLIAMS	PAINT SW7027 WELL-BRED BROWN	-	-	
4	CONTINUOUS PARAPET CAP	SHERWIN WILLIAMS	PAINTED SW7027 WELL-BRED BROWN	-	-	
5	EXISTING BRICK	EXISTING	DO NOT PAINT	-	-	
6	SERVICE DOOR/ELECTRICAL SERVICE	SHERWIN WILLIAMS	PAINT SW7027 WELL-BRED BROWN	-	-	
7	ACCENT WALL COLOR	EUROWEST	CASABLANCA COLOR MIX GROUT: MAPEI #11 SAHARA BEIGE	-	-	

EXTERIOR FINISH SCHEDULE | **H**

MISCELLANEOUS
A. SEE SCOPE OF WORK FOR RESPONSIBILITIES.
B. PROVIDE BLOCKING FOR SIGNAGE, TRELLIS AND CANOPY.
C. DURO-LAST TERMINATION BAR SHALL BE DARK BRONZE.
D. OWNER REPRESENTATIVE WILL IDENTIFY WHICH PAINT SPECIFICATION WILL BE PRIMARY

SEALERS (REFER TO SPECS):
A. SEALANT AT ALL WALL AND ROOF PENETRATIONS.
B. SEALANT AT ALL WINDOW AND DOOR FRAMES AT HEAD, SILL AND JAMB.
C. DO NOT APPLY SEALANT AT SILL WEEP HOLES.

☐ DENOTES ITEMS SUPPLIED AND INSTALLED BY SIGN VENDOR

☐ DENOTES EXTERIOR FINISH.

⬭ DENOTES SIGN/AWNING/CANOPY ITEMS - VENDOR SUPPLIED AND INSTALLED. SEE THE SCOPE OF WORK SHEETS.

GENERAL NOTES | **F**

SCOPE NOTES (RI)

1 RI REMOVE EXISTING BUILDING SIGNAGE AND INSTALL NEW.
2 RI NEW LIGHT FIXTURE - SEE ELECTRICAL
3 RI EXISTING WINDOW TO REMAIN.
4 RI NEW DRIVE THRU CANOPY.
5 RI EXISTING GAS AND ELECTRICAL METERS, INCLUDING EQUIPMENT ENCLOSURES - PAINT AS SCHEDULED.
6 RI PROVIDE ADDRESS NUMBERS ON MAIN ENTRANCE. NUMBERS SHALL BE ARABIC NUMERALS A MINIMUM OF 6" HIGH WITH A MINIMUM 1" STROKE. NUMBERS MUST BE VISIBLE FROM THE STREET. (Δ5)
7 RI EXISTING GALV. METAL CAP FLASHING - PRIME & PAINT FACE AND TOP.
8 RI EXISTING BRICK
9 RI INFILL RECESSED AREA WITH 7.
10 RI EXISTING DRIVE THRU WINDOW.
11 RI EXISTING ENTRY.
12 RI PATCH AND REPAIR EXISTING STUCCO / E.I.F.S.
13 RI EXISTING PIPE BOLLARD.
14 RI EXISTING GALV. METAL SCUPPER AND DOWNSPOUT. PRIME AND PAINT.
15 RI EXISTING OVERFLOW SCUPPER.
16 RI PROVIDE INTERNATIONAL SYMBOL OF ACCESSIBILITY AT 60" A.F.F.

KEY NOTES | **C**

GLMV ARCHITECTURE, P.L.L.C.
8535 Dodge Street, Suite 210
Omaha, NE 68114
Tel: (316) 265-5846
Fax: (316) 265-5846
www.glmv.com

MARK D. McCLUGGAGE LICENSED 2511 KANSAS PROFESSIONAL ARCHITECT
09-17-2020

18071.18005

Δ	08.03.20	UPDATED BLDG. CODE
Δ5	09.10.20	RTC

CONTRACT DATE: 04.29.19
BUILDING TYPE: SUCCESSOR
PLAN VERSION: DEC 2017
BRAND DESIGNER: DY
SITE NUMBER:
STORE NUMBER: 34386

TACO BELL
14880 S. HARRISON
OLATHE, KS

ROYAL CITY BELL, LLC
A Franchisee of Taco Bell

SUCCESSOR
HERITAGE

EXTERIOR ELEVATIONS

A4.0

PLOT DATE:

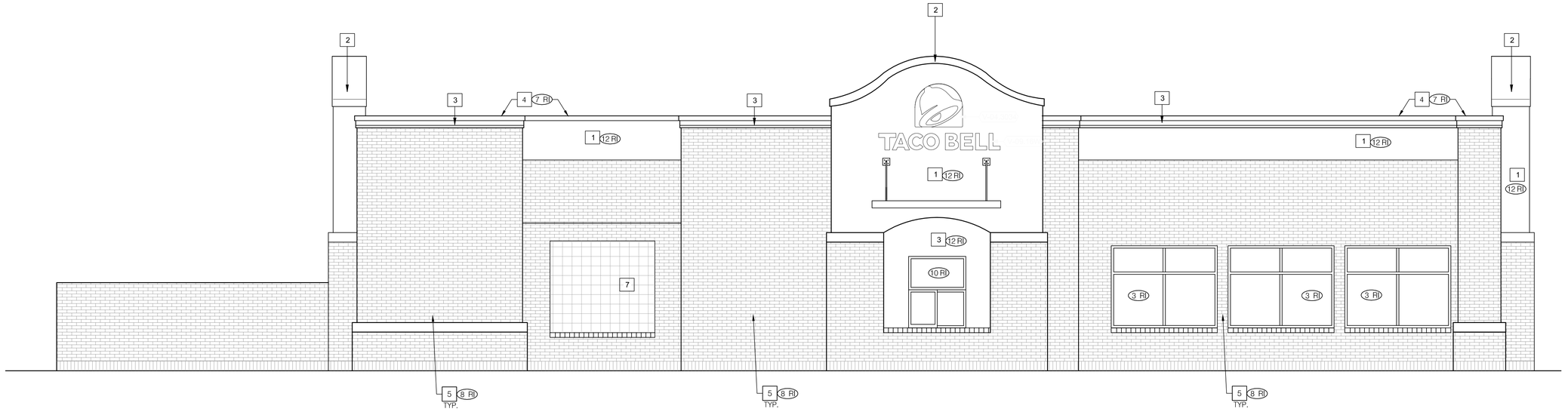

LEFT SIDE ELEVATION 1/4" = 1'-0" **A**

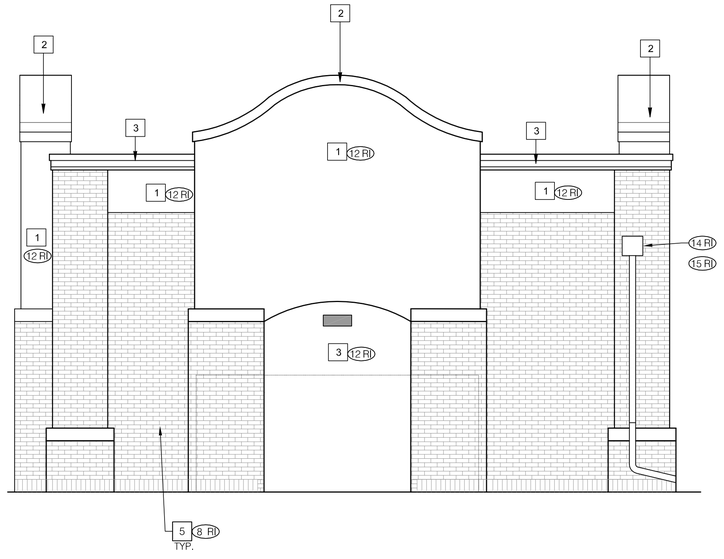

REAR ELEVATION 1/4" = 1'-0" **C**

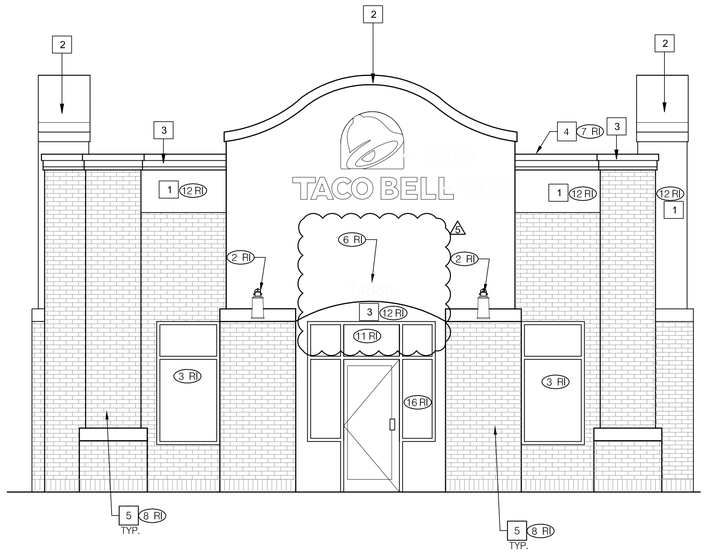

FRONT ELEVATION 1/4" = 1'-0" **B**

GLMV ARCHITECTURE, PLLC
1525 E. Douglas Wichita, KS 67211
Tel: (316) 265-9387 Fax: (316) 265-5646
www.glmv.com

MARK D. McCLUGGAGE
LICENSED
2511
KANSAS
PROFESSIONAL ARCHITECT
09-17-2020

18071.18005

3	08.03.20	UPDATED BLDG. CODE
5	09.10.20	RTC

CONTRACT DATE:	04.29.19
BUILDING TYPE:	SUCCESSOR
PLAN VERSION:	DEC 2017
BRAND DESIGNER:	DY
SITE NUMBER:	
STORE NUMBER:	34386

TACO BELL
14880 S. HARRISON
OLATHE, KS

ROYAL CITY BELL, LLC
A Franchisee of Taco Bell

SUCCESSOR
HERITAGE

EXTERIOR ELEVATIONS

A4.1

PLOT DATE:

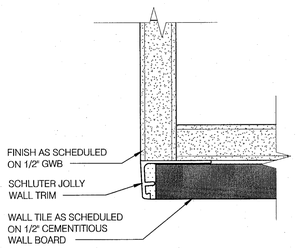

TILE CORNER TRANSITION DETAIL N.T.S. **16**

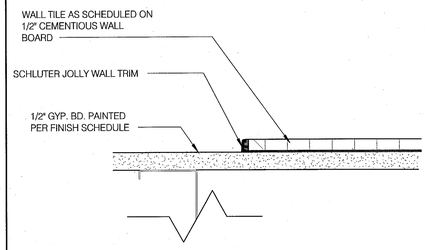

TILE WALL TO GYP TRANSITION N.T.S. **13**

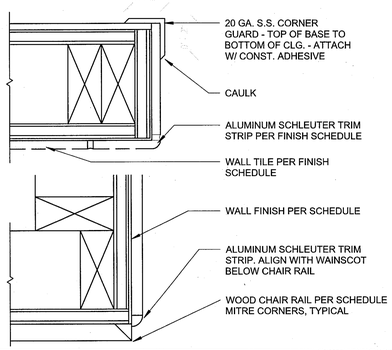

FINISH TRANSITIONS N.T.S. **9**

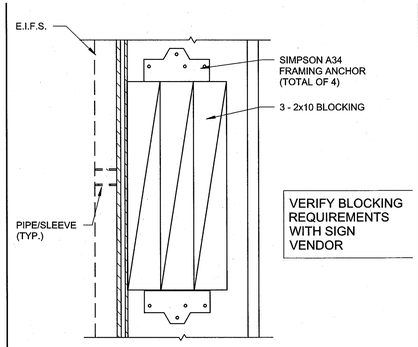

VERIFY BLOCKING REQUIREMENTS WITH SIGN VENDOR

BLOCKING DETAIL N.T.S. **5**

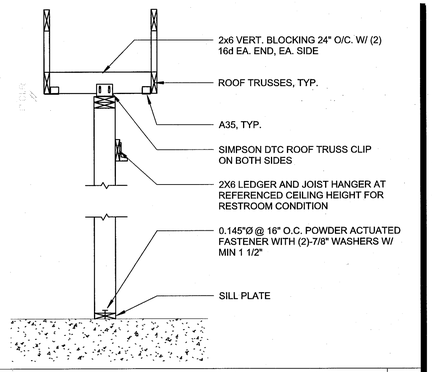

SUPPORT-PARALLEL TO TRUSS N.T.S. **1**

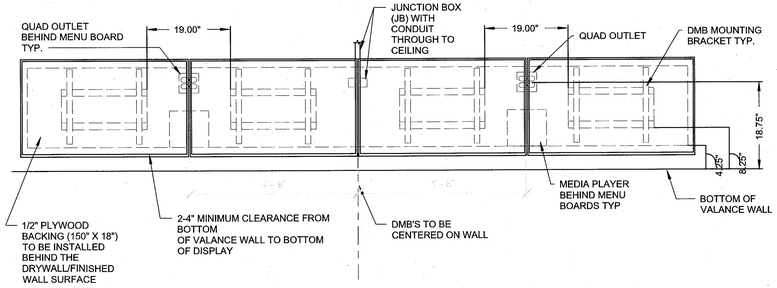

NOTES:
1. EC/GC TO INSTALL A TOTAL OS (4) IG5262 DUPLEX OUTLETS IN (2) QUAD BOXES ON FRONT OF VALANCE WALL AS SHOWN. OUTLETS TO BE ORANGE AND STRAIGHT BLADE.
2. EC/GC TO EVALUATE VALANCE WALL STRUCTURE TO ENSURE ADEQUATE SUPPORT OF DIGITAL MENU BOARDS EQUIPMENT. EC/GC TO INSTALL ADDITIONAL BACKING MATERIALS (AS REFERENCED ON DRAWINGS) AS NEEDED TO ENSURE ADEQUATE SUPPORT OF DIGITAL MENU BOARDS
3. EC/GC TO INSTALL (1) DATA JUNCTION (JB) IN VALANCE WALL AS SHOWN. CONDUIT TERMINATED ABOVE CEILING TO HAVE BUSHING.
4. EC/GC TO FUN (3) CAT6 LINES FROM NETWORK SWITCH TO DATA JUNCTION BOX. CAT6 LINES SHOULD HAVE BOTH PROPERLY TERMINATED WITH RJ-45 CONNECTORS. EXCESS CAT6 CABLE TO BE COILED INTO SERVICE LOOPS AT EACH END AND LEFT ACCESSIBLE FOR DMB INSTALL TEA. CAT6 TO BE RUN IN ACCORDANCE WITH ALL LOCAL MUNICIPALITY CODE REQUIREMENTS.
5. EC/GC SHALL ACQUIRE AND SECURE NY/ALL REQUIRED PERMITTING FOR THE WORK MENTIONED ABOVE PER MUNICIPALITY CODE REQUIREMENTS.
6. DRAWING PROVIDED IS FOR INSTALLATION OF DMB EQUIPMENT ONLY. NOT TO BE USED FOR ARCHITECTURAL PURPOSES. IF PLACEMENT OF REQUIRED ELEMENTS CANNOT BE MET AND WILL EXCEED A 3IN DEVIATION, STRATACACHE MUST BE NOTIFIES IMMEDIATELY.

JB = JUNCTION BOX
GC = GENERAL CONTRACTOR
EC = ELECTRICAL CONTRACTOR

ELECTRICAL SCHEDULE

QTY	DESCRIPTION	VOLT/PH	BRK SIZE	COND/WIRE	PNL/CCT	RECP TYPE	HGT AFF	REQUIREMENT & REMARKS
4	MENU BOARD - DIGITAL & MEDIA PLAYER	120/1 ISOLATED	20A	———	———	(4) IG5262	SEE PLAN	SEE LAYOUT AND PLAN

DIGITAL MENUBOARD DETAIL N.T.S. **14**

NOT USED **15**

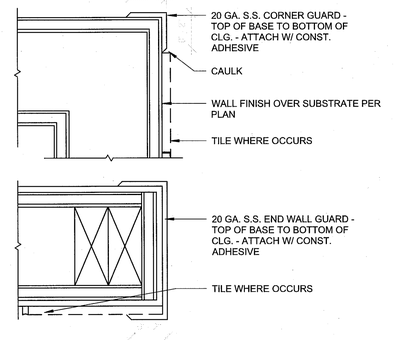

SS CORNER GUARDS N.T.S. **10**

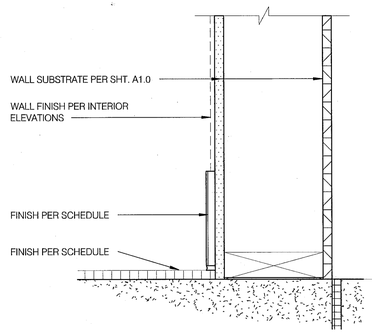

BASE @ DINING EXT. WALLS N.T.S. **11**

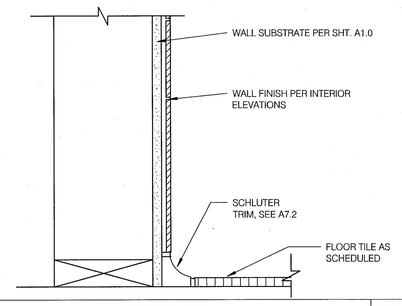

BASE @ TILE WALL N.T.S. **12**

NOT USED N.T.S. **6**

E.I.F.S. FASCIA N.T.S. **7**

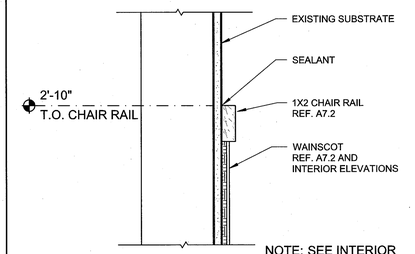

NOTE: SEE INTERIOR ELEVATIONS FOR FINISHES

CHAIR RAIL DETAIL N.T.S. **8**

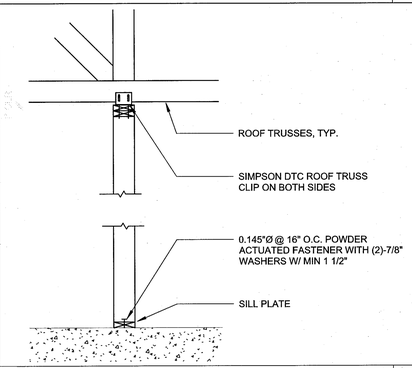

SUPPORT-PERP TO TRUSS N.T.S. **2**

NOT USED N.T.S. **3**

NOT USED N.T.S. **4**

GLAVY ARCHITECTURE, PLLC
1525 E. Douglas Wichita, KS 67211
Tel: (316) 265-5566 Fax: (316) 265-5566
www.glav.com

MARK D. McCLINGAHE
LICENSED
2511
STATE OF KANSAS
PROFESSIONAL ARCHITECT

18071.18005

3	08.03.20 UPDATED BLDG. CODE

CONTRACT DATE: 04.29.19
BUILDING TYPE: SUCCESSOR
PLAN VERSION: DEC 2017
BRAND DESIGNER: DY
SITE NUMBER:
STORE NUMBER: 34386

TACO BELL
14880 S. HARRISON
OLATHE, KS

ROYAL CITY BELL, LLC
A Franchisee of Taco Bell

M SUCCESSOR
SUCCESSOR
HERITAGE

FINISH AND CONSTRUCTION DETAILS

A6.0

PLOT DATE: 11/13/2018 11:33:15 AM

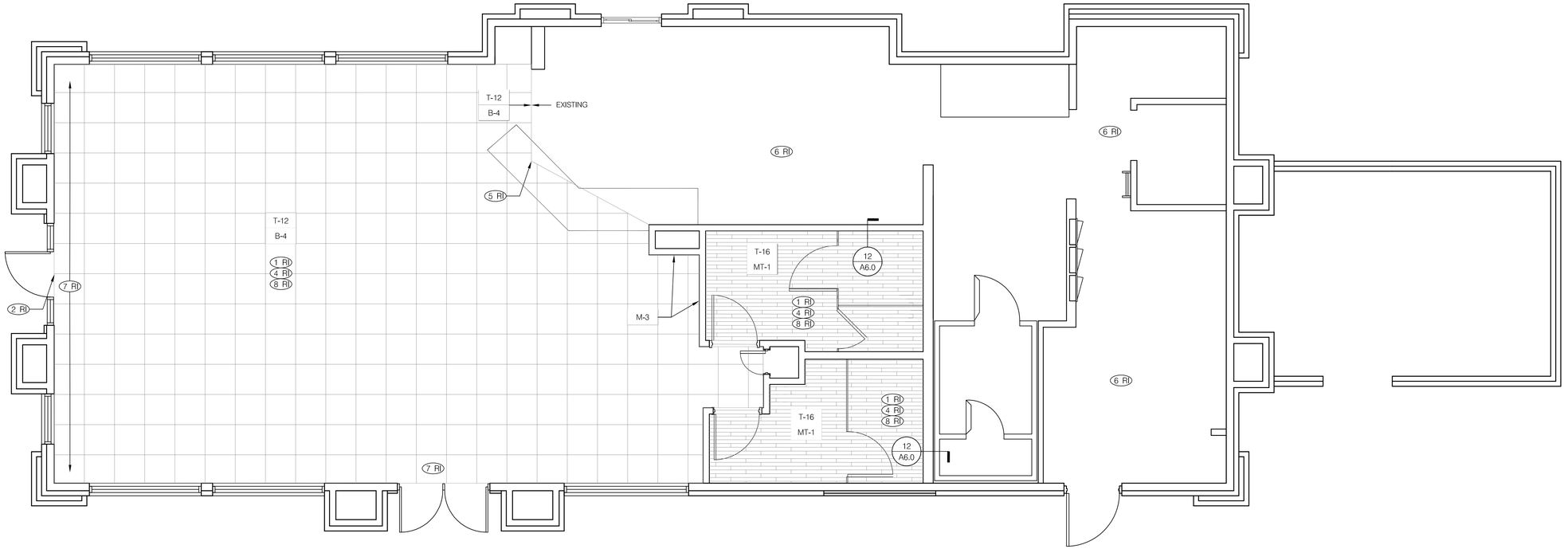

NOTES:

SEE INTERIOR ELEVATIONS, SHEETS A8.0 & A8.1 FOR WALL TILE APPLICATION.

FINISH FLOOR PLAN 1/4"=1'-0" **A**

NOT USED **E**

NOT USED **D**

A. SEE INTERIOR ELEVATIONS FOR PAINTING, GYPSUM BOARD AND TILE.

B. ▭ DENOTES FINISH MATERIAL. REFER TO SHT A7.2 FOR FINISHES.

C. TILE JOINTS (U.O.N.):
1. QUARRY FLOOR TILE : 1/4"
2. CERAMIC FLOOR TILE : 3/16"
3. GLAZED WALL TILE : 1/8"
4. BASE, TRIM AND ACCESSORIES : MATCH ADJOINING TILE UNITS

D. PROVIDE BREAK IN TILE TO MATCH-UP WITH EXPANSION & CONTROL JOINTS IN SLAB.

E. ALL BASE TILE SHALL BE SANITARY COVE STYLE WITH 3/8" MIN RADIUS.

F. SEE SCOPE OF WORK SHEETS FOR RESPONSIBILITIES.

H. PROVIDE CLEAR SILICONE CAULK WHERE FRP STOPS AT TOP OF COVE BASE AT NEW CONSTRUCTION.

I. PROVIDE CLEAR SILICONE CAULK WHERE ALL FIXED AND BUILT-IN COUNTERS / EQUIPMENT ABUTS WALL SURFACE.

J. SEE SHEET A2.0 FOR REFERENCES OF INTERIOR ELEVATIONS.

K. GROUT CAULK TO MATCH SPECIFIED GROUT COLOR

FINISH NOTES **C**

REMODEL IMAGE (RI)

1 RI NEW FLOOR TILE AND BASE. SEE FINISH NOTE 'B'.

2 RI TILE STARTING POINT. CENTER TILE SO THAT NO CUT TILE IS LESS THAN 3"

3 RI NOT USED

4 RI G.C. SHALL REPAIR ANY DAMAGED SUBSTRATE BEFORE INSTALLATION OF NEW TILE BASE. PROVIDE A CLEAR SILICONE SEAL. PAINT AT THE TOP OF THE BASE TILE. (FRONT OF HOUSE ONLY.)

5 RI INSTALL NEW TILE, PROVIDE SMOOTH AND LEVEL TRANSITION.

6 RI REGROUT TILE AS NEEDED.

7 RI INSTALL FULL FLOOR TILE.

8 RI FLOOR TILE TO BE INSTALLED IN A STRAIGHT STACK BOND.

KEY NOTES **B**

GLMV ARCHITECTURE, PLLC
1525 E. Douglas Wichita, KS 67211
Tel: (316) 265-9397 Fax: (316) 265-5646
www.glmv.com

MARK D. McCLUGGAGE
LICENSED
2511
KANSAS
PROFESSIONAL ARCHITECT
09-17-2020

18071.18005

3	08.03.20	UPDATED BLDG. CODE

CONTRACT DATE:	04.29.19
BUILDING TYPE:	SUCCESSOR
PLAN VERSION:	DEC 2017
BRAND DESIGNER:	DY
SITE NUMBER:	
STORE NUMBER:	34386

TACO BELL
14880 S. HARRISON
OLATHE, KS

ROYAL CITY BELL, LLC
A Franchisee of Taco Bell

SUCCESSOR HERITAGE

FINISH FLOOR PLAN

A7.0

PLOT DATE:

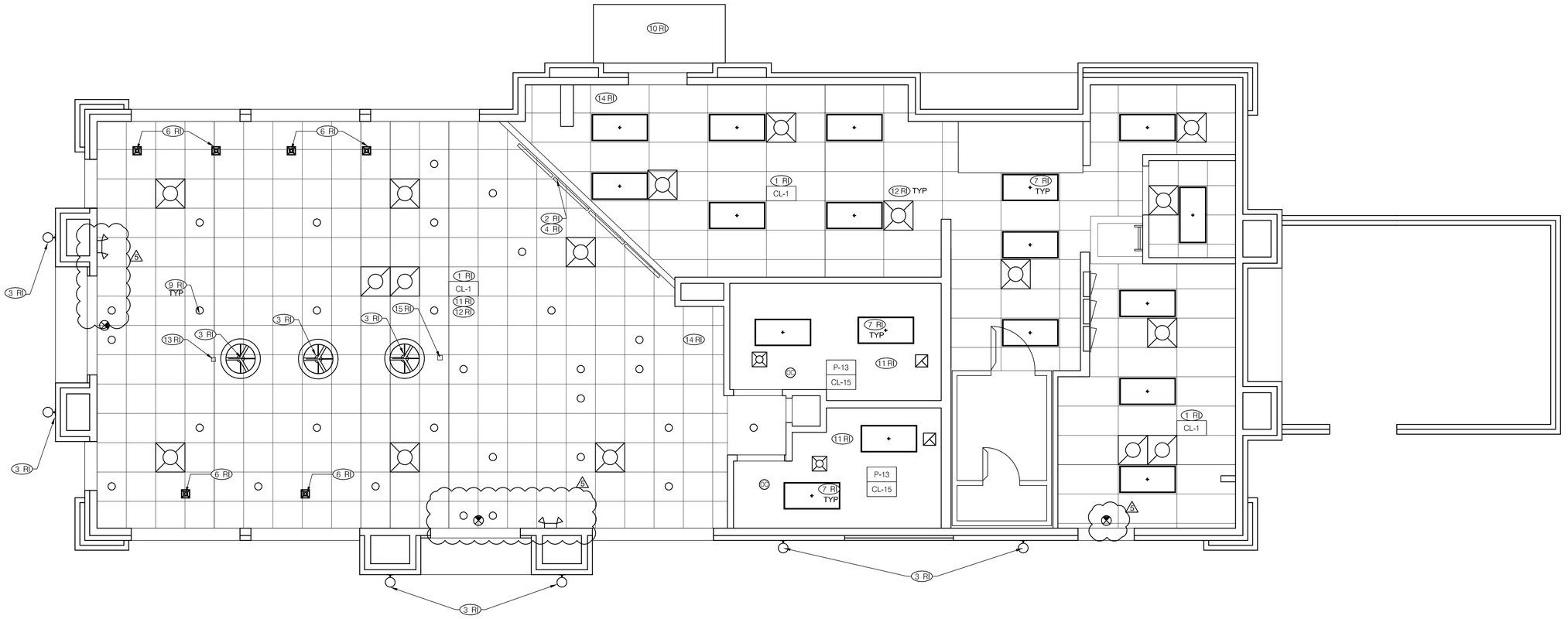

EXTERIOR WALL SCONCE

PENDANT FIXTURE

RECESSED CAN

EXIT AND EMERGENCY LIGHT

CHANDELIER

EMERGENCY LIGHT

CEILING SYMBOL LEGEND E

DIMENSIONS:
A. ALL DIMENSIONS ARE TO FACE OF FINISH U.O.N.

CEILING FINISHES:
A. REFER TO ROOM FINISH SCHEDULE SHEET A7.2 FOR CEILING FINISHES .

SUSPEND CEILING:
A. ACOUSTICAL PANEL INSTALLATION: INSTALL ACOUSTICAL PANELS WITH EDGES IN CLOSE CONTACT WITH METAL SUPPORT AND IN TRUE ALIGNMENT.
B. ALLOWABLE VARIATIONS FROM FLAT AND LEVEL SURFACES: 1/8" IN MAX
C. ALLOWABLE VARIATIONS FROM PLUMB OF GRID MEMBERS: AS CAUSED BY ECCENTRIC LOADS 2 DEGREE MAX.
D. INSTALL SYSTEM AFTER MAJOR ABOVE CEILING WORK IS COMPLETE. COORDINATE LOCATIONS OF HANGERS WITH RELATED WORK.
E. SEE SPECS FOR ADDITIONAL INFORMATION.
F. CUT EDGES OF TEGULAR TILES SHALL BE ROUTED.

CEILUME SUSPENDED CEILING:

A. CUT TILES: USE SCISSORS OR STRAIGHT BLADE AVIATION SNIPS TO CUT CEILING TILES. DO NOT USE A UTILITY KNIFE.TWO (2) OR THREE (3) TILES CAN BE NESTED TOGETHER AND CUT AT ONE TIME.
B. CUTTING HOLES: RUN HOLE SAW IN REVERSE, THIS WILL ALLOW FOR SMOOTH CUT AND PREVENT SAW BLADE FORM BINDING OR GRABBING VINYL.
C. FOR AREAS WITH HIGH WIND LOAD OR POSITIVE PRESSURE BELOW THE CEILING RESULTING IN UPLIFT OF TILES:
INSTALL TWO (2) UPLIFT PREVENTION CLIPS PER TILE; USG/DONN I15 CEILING CLIP OR EQUIVALENT.
INSTALL CLIPS ON TILES NEAREST DOORS FIRST, AND WORK INWARDS. ONLY CLIP TILES THAT THAT EXHIBIT UPLIFT, DO NOT INSTALL ON ENTIRE CEILING, DO NOT INSTALL A "BLANKET" OR MINERAL FIBER TILE ON TOP OF THE CEILUME TILE TO PREVENT UPLIFT.

GYPSUM BOARD CEILING:
A. SUBSTRATE SHALL BE 1/2"THICK GYP. BD.
B. ACOUSTICAL SEALANT: APPLY TO GYP. BD. PANELS AS INDICATED IN SPECS.
C. GYP. BD. FINISHES AND DECORATING: REFER TO DRAWING FOR TEXTURE AND FINISHES.

ELECTRICAL:
A. SEE ELECT. DWGS FOR FIXTURE SCHEDULE.
B. SEE ELECT. DWGS FOR EMERGENCY LIGHTS/FIXTURE LOCATION
C. CEILING MOUNTED OUTLETS & PLATES SHALL BE BLACK
D. PENDANTS SHALL BE ALIGNED WITH WINDOWS NOT FURNITURE.

MECHANICAL:
A. ALL DINING ROOM SUPPLY AND RETURN GRILLS SHALL BE INSULATED. FAILURE TO COMPLY WITH RESULT IN INSTALLATION BEING REJECTED, CORRECTIONS MADE AND ALL REMODELS COSTS CHARGED BACK TO CONTRACTOR.

REFLECTED CEILING PLAN NOTES D

1 RI NEW CEILING GRID AND TILES PER SCHEDULE.

2 RI INSTALL NEW DIGITAL MENUBOARD. SEE 14/A6.0

3 RI NEW EXTERIOR LIGHTING - SEE ELECTRICAL

4 RI EXISTING MENU BOARD BULKHEAD TO BE PAINTED.

5 RI LIGHTS OVER HUB TABLE ARE SUSPENDED FROM THE CEILING

6 RI PENDANT LTG.

7 RI NEW LED LIGHTING - BOH AND RESTROOMS

8 RI EXISTING SOFFIT TO REMAIN.

9 RI NEW RECESSED DOWNLIGHT.

10 RI NEW CANOPY BY VENDOR

11 RI ALL NEW AND REUSED CEILING ACCESSORIES SHALL BE PAINTED TO MATCH CEILING IN SEMI-GLOSS FINISH.

12 RI REPLACE EXISTING DIFFUSERS WITH NEW IN SAME LOCATION.
TO MECHANICAL SHEET FOR SCHEDULE.

13 RI POWER AND DATA FOR HUB TABLE

14 RI COORDINATE WITH PEPSI FOR EQUIPMENT PROVIDED AND MODIFY CEILING AS REQUIRED TO MAINTAIN CLEARANCES FOR ICE MACHINE. NOTIFY ARCHITECT PRIOR TO BUILDING MODIFICATIONS IN THIS AREA.

15 RI POWER AND DATA FOR KIOSK

KEY NOTES B

GLMV ARCHITECTURE, P.L.L.C
8535 Dodd Parkway, KS 66227
Tel: (316) 265-9297 Fax: (316) 265-5846
www.glmv.com

MARK D. McKILLIGAN
LICENSED
2511
KANSAS
PROFESSIONAL ARCHITECT
09-17-2020

18071.18005

3	08.03.20	UPDATED BLDG. CODE
2	08.18.20	REVISED SEATING
1	09.10.20	RTC

CONTRACT DATE: 04.29.19
BUILDING TYPE: SUCCESSOR
PLAN VERSION: DEC 2017
BRAND DESIGNER: DY
SITE NUMBER:
STORE NUMBER: 34386

TACO BELL
14880 S. HARRISON
OLATHE, KS

ROYAL CITY BELL, LLC
A Franchisee of Taco Bell

SUCCESSOR
HERITAGE

REFLECTED CEILING PLAN

A7.1

PLOT DATE:

FINISH SCHEDULE

KEY NAME	QTY	MANUFACTURER	STYLE	COLOR	SIZE	GROUT	COMMENTS	ALTERNATE FINISH
CEILING								
CL-2		CEILUME	STRATFORD	LATTE	24X24	N/A	REUSE CEILING GRID. PAINT GRID AND DIFFUSERS SW 6080 UTTERLY BEIGE. INSTALL TILES USING MFG. RECOMMENDED CLIPS. REF. C/A7.1	
CL-1		CERTAINTEED	VINYLROCK #1140, WASHABLE NON-PERFORATED, 24"x48"X1/2"	WHITE			WHITE SUSPENSION GRID W/ ALUMINUM FACE FLAME SPREAD RATING 0-25, CLASS A	
CL-15		N/A	GYPSUM BOARD	PAINT SW2829 CLASSICAL WHITE, FLAT FINISH	N/A	N/A	FRAME WITH 2X6 WOOD STUDS @ 16"	
CHAIR RAIL								
CR-1			STAINED MAPLE CHAIR RAIL	MINWAX: CLASSIC GREY SATIN	1"X2"	N/A	APPLY 2 COATS OF STAIN PER MANUFACTURER'S SPECIFICATIONS; FILL AND SAND ALL NAIL HOLES PRIOR TO STAINING	
FLOOR BASE								
B-4		CREATIVE MATERIALS	ICON FOLK LIGHT		3"X24"	MAPEI # 27 SILVER, 1/8" JOINT WIDTH	PROVIDE EXPANSION JOINT @ 10'-0" O.C. MAX. COORDINATE WITH TILE AND APPLICATION PER ANSI SECTION 108.01, 2005-3.7.	
FLOORING								
T-12		CREATIVE MATERIALS	ICON FOLK LIGHT		24"X24"	MAPEI # 27 SILVER, 1/8" JOINT WIDTH	STACK BOND INSTALLATION	
T-16		CREATIVE MATERIALS	SALVAGEWOOD	BROWN	3"X36"	MAPEI # 11 SAHARA BEIGE, 1/8"JOINT WIDTH	STACK BOND INSTALLATION	
LAMINATE								
L-4		NEVAMAR	WK0027-T	BAILEY			INTERIOR DOORS	
L-4A		WILSONART	17005K-57	MORRIS OAK			ALTERNATE TO L-4	
L-9		WILSONART	Y0461-60	DETROIT CONCRETE, MATTE FINISH			SAUCE & SODA, POS & PICK UP COUNTER FACE	
METAL TRANSITION								
MT-1		SCHLUTER	DILEX-AHK	AT: SATIN NICKEL ANODIZED ALUMINUM			CALIFORNIA STORES ONLY. AE: SATIN ANODIZED ALUMINUM	
MT-2		SCHLUTER	JOLLY	SATIN ANODIZED ALUMINUM			VERTICAL TRIM AT WALL TILE TO GYPSUM BOARD TRANSITION DINING/POS AREAS	
MT-3		SCHLUTER	DILEX-AHK	EB: BRUSHED STAINLESS STEEL			BRUSHED STAINLESS STEEL COVE BASE TRIM WHERE WALL TILE MEETS DINING FLOOR TILE	
MT-4				BLACK			METAL TRIM AT VERTICAL WAINSCOT SEAMS	
MT-5				BLACK			1/2" DECORATIVE METAL TRIM AT EXPOSED EDGES AND VERTICAL SEAMS; AND 1/2" x 1/2" CORNER TRIM AT OUTSIDE CORNERS ON POS COUNTER AND MILLWORK	
PAINT								
P-6		SHERWIN WILLIAMS	SW2829	CLASSICAL WHITE, SEMI-GLOSS			PRIMER: #023 (WHITE) FRESH START 100% ACRYLIC	
P-7		SHERWIN WILLIAMS	SW7027	WELL-BRED BROWN, SEMI-GLOSS			PRIMER: #023 (WHITE) FRESH START 100% ACRYLIC	
P-13		SHERWIN WILLIAMS	SW2829	CLASSICAL WHITE, FLAT FINISH			PRIMER: #023 (WHITE) FRESH START 100% ACRYLIC	
SOLID SURFACE								
SS-1		STARON	BW010	BRIGHT WHITE SS-3 GLOSS 15			COUNTER TOPS/24" DIAMETER TABLE TOP	
TILE								
T-13	362 SF	CREATIVE MATERIALS	CASABLANCA	COLOR MIX MATTE	8"X8"	MAPEI #11 SAHARA BEIGE, 1/8" JOINT WIDTH	RESTROOM ACCENT WALL TILE	
T-14	365 SF	CREATIVE MATERIALS	TERRA	ANTHRACITE	8"X8"	MAPEI #47 CHARCOAL, 1/8" JOINT WIDTH	RESTROOM WALL TILE	
T-15	131 SF	CREATIVE MATERIALS	CASABLANCA	GREY MIX MATTE	8"X8"	MAPEI # 01 ALABASTER, 1/8" JOINT WIDTH	ACCENT WALL BEHIND POS AND DRINK STATION	
WALL COVERING								
WC-2		WOLF GORDON	'RAMPART' HIGH IMPACT WALL COVERING	FOUNDATION / ONYX (GOH 12172612)			RAILROAD INSTALLATION; THERE SHOULD BE NO SEAMS ALONG WALLS	1 ROLL = 80 L.F.

FINISH LEGEND — A

ROOM FINISH SCHEDULE

QW	Floor Finish	Base Finish	Wall Finish	Accent Wall	CEILING: FOH - CENTRAL	CEILING: FOH - SIDES	CEILING: SOFFIT	LAMINATES: DOOR LAMINATE	LAMINATES: POS COUNTERTOP	LAMINATES: POS COUNTER FACE	Comments
WOMEN'S RESTROOM	T-16	MT-1	T-14	T-13	CL-15, P-13	N/A	N/A	L-4	N/A	N/A	
MEN'S RESTROOM	T-16	MT-1	T-14	T-13	CL-15, P-13	N/A	N/A	L-4	N/A	N/A	
DINING	T-12	B-4, MT-3	P-6, P-7, CR-1, L-8	T-15	CL-2	CL-5	CL-15, P-13	N/A	SS-1	L-9, MT-5	
BOH	N/A	N/A	N/A	N/A	N/A	N/A	N/A	N/A	N/A	N/A	EXISTING

ROOM SCHEDULE — B

FRP-1 MFR.: MARLITE
TYPE: FIBERGLASS REINFORCED PANEL
COLOR: FP-100 WHITE (PEBBLED FINISH)
NOTE: NO COLOR VARIATIONS ACCEPTED

PAINTING EXISTING METAL CEILING GRIDS AND HVAC GRILLS/DIFFUSERS:

APPLICATOR MUST DO THEIR DUE DILIGENCE WITH PREPARATION
PRIMER: 1 COAT OR SPOT PRIME OF B66W310, PRO INDUSTRIAL PRO-CRYL UNIVERSAL PRIMER.
FINISH: 2 COATS SW A82-100 SERIES, A-100 EXTERIOR LATEX SATIN

WALL/ PAINT SPEC — F

1. LAMINATE MAY BE SHIPPED FLAT OR ROLLED IN A BOX. FOR LONG TERM STORAGE, WILSONART RE-COVER LAMINATE SHOULD BE STORED FLAT (HORIZONTALLY) WITH THE ADHESIVE SIDE FACING DOWN (DECORATIVE SIDE UP).
2. CONDITION BOTH THE LAMINATE AND THE SUBSTRATE IN THE SAME ENVIRONMENT FOR 48 HOURS BEFORE FABRICATION. IF ROLLED, UNROLL THE LAMINATE FOR THE 48 HOUR ACCLIMATION PERIOD. RECOMMENDED CONDITIONING AND ACCLIMATION IS 75°F AND 50% RELATIVE HUMIDITY. **DO NOT APPLY RE-COVER LAMINATE IF THE SURFACE TEMPERATURE OF THE LAMINATE OR THE SUBSTRATE IS BELOW 50°F.**
3. IF BONDING OVER AN EXISTING SUBSTRATE THAT IS DAMAGED, REPAIR THE SURFACE TO PREVENT AN UNEVEN APPEARANCE OF THE FINISHED ASSEMBLY. RECOMMENDED PRODUCTS FOR REPAIRING DAMAGED HIGH PRESSURE DECORATIVE LAMINATE OR WOOD SUBSTRATE: J-B WELD® WOODWELD, ELMER'S®CARPENTER'S® WOOD FILLER, AND BONDO® ALL-PURPOSE PUTTY. BE SURE TO READ AND FOLLOW THE MANUFACTURER'S PRECAUTIONS AND DIRECTIONS FOR USE. SAND AND CLEAN ALL REPAIRED AREAS BEFORE APPLYING THE LAMINATE.
4. SUBSTRATES SHOULD BE CLEAN AND FREE OF RESIDUE. IF BONDING TO AN EXISTING DECORATIVE SURFACE, MAKE SURE IT IS ADEQUATELY CLEANED AND DRIED BEFORE BONDING. SUITABLE CLEANING PRODUCTS INCLUDE: WILSONART® 110, WILSONART® 121, WILSONART® 130, WILSONART® 131, WILSONART® 131A, ACETONE, ISOPROPYL ALCOHOL, OR WINDEX® WITH AMMONIA. DO NOT USE A CLEANER THAT WILL LEAVE AN OILY RESIDUE. BE SURE TO READ AND FOLLOW THE MANUFACTURER'S PRECAUTIONS AND DIRECTIONS FOR USE.
5. TO PRECUT LAMINATE PRIOR TO BONDING, USE CARBIDE TIPPED SAW BLADES, ROUTER BITS AND LAMINATE SLITTERS. CUTTING BLADES AND ROUTER BITS SHOULD BE KEPT SHARP AND CLEAN.
6. WHEN USING MULTIPLE SHEETS OF LAMINATE TO COVER AN AREA, LEAVE A GAP BETWEEN SHEETS TO ALLOW FOR PROPER LAMINATE MOVEMENT. A MINIMUM GAP OF 1/16" IS REQUIRED BETWEEN SHEETS OF RE-COVER LAMINATE USED IN NON-ENVIRONMENTALLY CONTROLLED AREAS. A MINIMUM GAP OF 1/32" IS REQUIRED BETWEEN SHEETS OF RE-COVER LAMINATE IN ENVIRONMENTALLY CONTROLLED AREAS.
7. PRIOR TO INSTALLATION, AND BEFORE REMOVING THE PEEL SHEET THAT COVERS THE ADHESIVE, DRY FIT THE RE-COVER LAMINATE TO THE SUBSTRATE. ONCE YOU HAVE INDEXED THE LAMINATE, REMOVE 1"-2" OF THE PEEL SHEET ON ONE END AND LIGHTLY TACK IT IN PLACE. BEGIN REMOVING THE PEEL SHEET, MAKING SURE THE OPPOSITE END IS STILL PROPERLY ALIGNED. WORK YOUR WAY DOWN THE ENTIRE LENGTH OF THE LAMINATE SHEET UNTIL THE PEEL SHEET IS COMPLETELY REMOVED AND THE RE-COVER LAMINATE IS FLAT ON THE SURFACE. APPLY UNIFORM BONDING PRESSURE (30-40 PSI MINIMUM) OVER THE ENTIRE BONDED SURFACE USING A MECHANICAL PINCH ROLLER (RECOMMENDED) OR A 3" WIDE J-ROLLER. DO NOT USE A WOODEN BLOCK OR OTHER HAND ROLLER.
8. **RE-COVER LAMINATE IS NOT REPOSITIONABLE. ANY ATTEMPTS TO REPOSITION THE LAMINATE WILL RESULT IN INADEQUATE BONDING.** IF THE RE-COVER LAMINATE HAS BEEN POSITIONED INCORRECTLY, REMOVE USING A HEAT GUN TO SOFTEN THE ADHESIVE, AND THEN PULL THE LAMINATE AWAY FROM THE SUBSTRATE. **ONCE A SHEET IS REMOVED, IT CANNOT BE REAPPLIED.** REPLACE IT WITH A NEW SHEET OF RE-COVER LAMINATE.
9. ONCE BONDED, YOU CAN BEGIN MACHINING THE RE-COVER ASSEMBLY IMMEDIATELY. HIGH TOOL SPEED AND LOW FEED SPEED ARE RECOMMENDED FOR BEST RESULTS. PRIOR TO ROUTING EDGES, A RAZOR MAY BE USED TO SCORE THE ADHESIVE SIDE OF THE LAMINATE TO PREVENT THE ADHESIVE LAYER FROM ROLLING UP DURING THE PROCESS.
10. TO AVOID STRESS CRACKING, DO NOT USE SQUARE-CUT INSIDE CORNERS. ALL INSIDE CORNERS SHOULD HAVE A MINIMUM OF 1/8" RADIUS. DRILL OVERSIZED HOLES FOR SCREWS OR BOLTS. SCREWS OR BOLTS SHOULD BE SLIGHTLY COUNTERSUNK INTO THE FACE SIDE OF A LAMINATE CLAD SUBSTRATE.

WILSON ART RE-COVER LAMINATE INSTALLATION INSTRUCTIONS — E

1. INSTALL FRP ON KITCHEN SIDE OF SERVING COUNTER WALL
2. GALV. STEEL WALL AND CEILING FINISHES BY WIX/WIF BOX MFR.
3. REFER TO INTERIOR ELEVATIONS FOR LOCATIONS OF TILE AND FRP
4. FOR FINISH LOCATIONS REFER TO:
   a. SHEETS A4.0 & A4.1 EXTERIOR ELEVATIONS
   b. SHEET A7.0 FLOOR FINISH PLAN
   c. SHEET A7.1A/B/C/D REFLECTED CEILING PLAN
   d. SHEET A8.0 TO A8.1 A/B INTERIOR ELEVATIONS
5. APPROVED PAINT MANUFACTURERS: PORTER, BENJAMIN MOORE, SHERWIN WILLIAMS, ICI, & PITTSBURGH PAINTS MATCH SPECIFIED SCHEDULE COLORS EXACTLY
6. ALL PAINTED GYPSUM BOARD SHALL HAVE A LIGHT ORANGE PEEL TEXTURE
7. ALL MORTAR SHALL BE MIXED WITH WHITE SAND TO INSURE A COLOR CONSISTENT TO THE ORIGINAL INTENT

GENERAL NOTES — D

EUROWEST DECORATIVE SURFACES
JAN DETER
NATIONAL ACCOUNT MANAGER
DESIGN/ ARCH. CONSULTANT
(714)-309-9551
JDETER@EUROWEST.COM
WWW.EUROWEST.COM

CREATIVE MATERIALS CORP.
CRAIG LANSLEY
PH: 518.713.5372
CLANSLEY@CREATIVEMATERIALSCORP.COM
PH: 800-207-2967 (2355)
TACOBELLTILE@CREATIVEMATERIALS.COM

MARLITE
MIKE FREW
(330)260-7623
MFREW@MARLITE.COM

WOLF GORDON
JESSICA ROSE
(213)999-1141
JESSICA.ROSE@WOLFGORDON.COM

EVERBRITE
ANTHONY NOTO
ANOTO@EVERBRITE.COM

AGI
RANDY KERR
RKERR@AGISIGN.COM

CUMMINGS
ANN BAKER
(800)489-7446 EXT. 10001
DIRECT: (615)872-0068
CELL: (615)812-2204

WILSONART INTERNATIONAL, INC.,
ALLYSON MAZZARINI
SPECIFICATION REPRESENTATIVE
(562)781 - 4059
MAZZARA@WILSONART.COM

SHERWIN WILLIAMS
BRAD HARRINGTON
(216)341-5553 EXT 115
CELL: (216)-210-2723

CEILUME
DAVID CONDELLO
DAVID@CEILUME.COM
1-(877)492-5605

IDX
DENNIS CARUANA
SENIOR PROJECT MANAGER
DIRECT: (909)212 - 8375
CELL: (909)217 - 6674
DENNIS.CARUANA@IDXLOSANGELES.COM

FINISH CONTACTS — C

GLMV ARCHITECTURE, PLLC
1525 E. Douglas Wichita, KS 67211
Tel: (316) 265-9367 Fax: (316) 265-5646
www.glmv.com

MARK D. McCLUGGAGE
LICENSED
2511
KANSAS
PROFESSIONAL ARCHITECT

18071.18005

3	08.03.20	UPDATED BLDG. CODE

CONTRACT DATE: 04.29.19
BUILDING TYPE: SUCCESSOR
PLAN VERSION: DEC 2017
BRAND DESIGNER: DY
SITE NUMBER:
STORE NUMBER: 34386

TACO BELL
14880 S. HARRISON
OLATHE, KS

ROYAL CITY BELL, LLC
A Franchisee of Taco Bell

SUCCESSOR
HERITAGE

FINISH LEGEND AND SCHEDULE

A7.2

PLOT DATE: 11/13/2018 11:33:32 AM

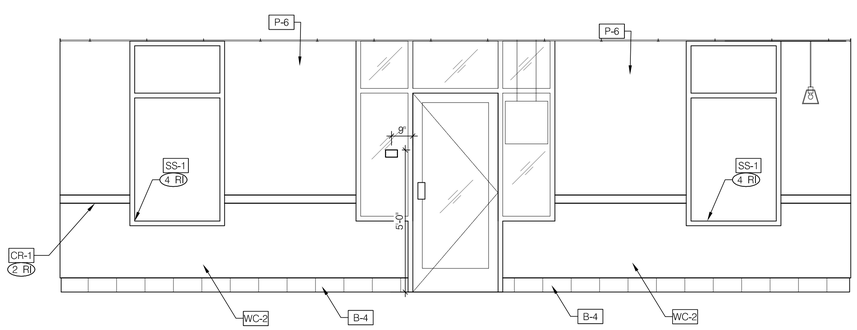

2

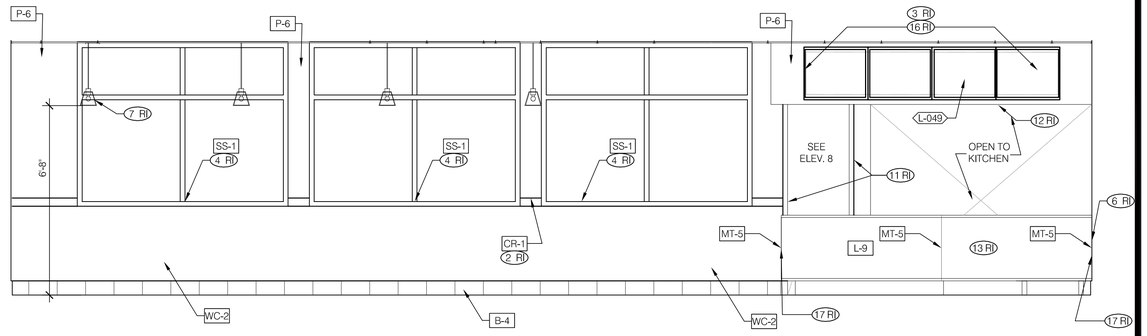

1

DINING 3/8" = 1'-0"

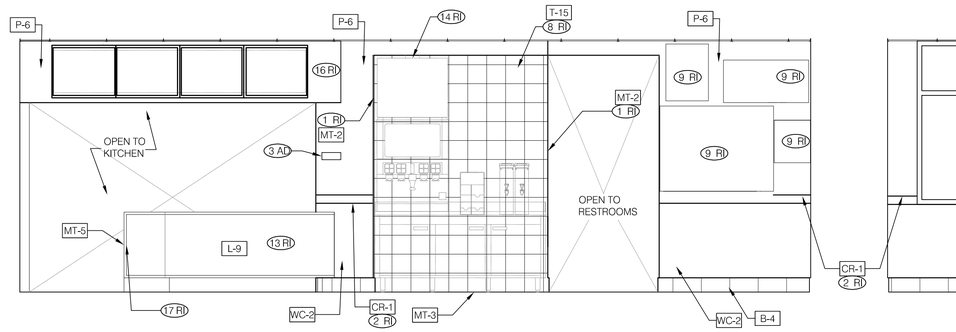

4

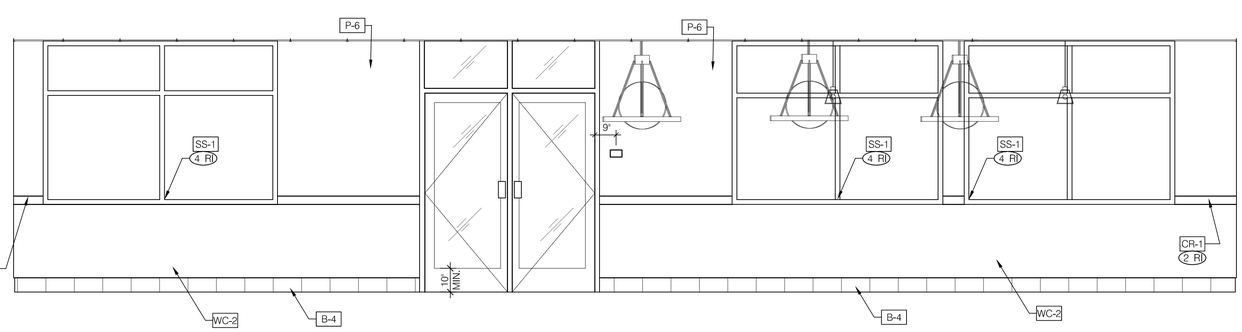

3

DINING 3/8" = 1'-0"

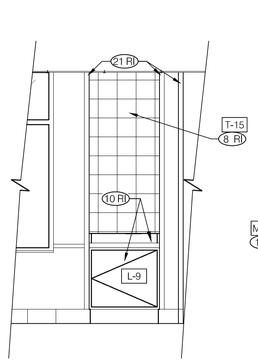

8

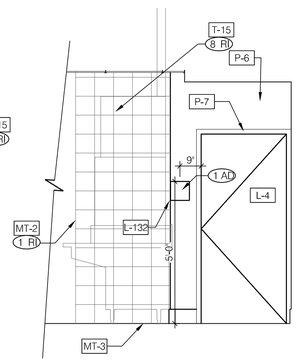

7

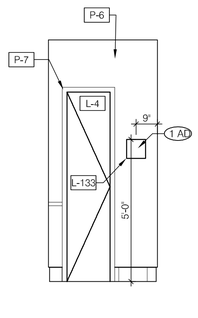

6

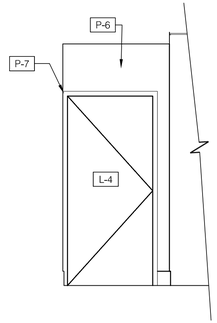

5

PASSAGE 3/8" = 1'-0"

REMODEL IMAGE (RI)

(1 RI) INSTALL SCHLUTER WALL TRIM AT TILE EDGE.

(2 RI) CHAIR RAIL. SEE 8/A6.0.

(3 RI) INSTALL NEW DIGITAL MENU BOARDS.

(4 RI) NEW WINDOW SILL

(5 RI) NOT USED

(6 RI) PROVIDE CLEAR SILICONE CAULK WHERE ALL FIXED AND BUILT-IN COUNTERS / EQUIPMENT ABUT WALL SURFACES. WHERE GAP BETWEEN WALL AND COUNTER SPLASH / EQUIPMENT EXCEEDS 1/4", PROVIDE S.S. CLOSURE ANGLE.

(7 RI) LIGHT FIXTURE. REFER TO ELECTRICAL

(8 RI) INSTALL WALL TILE ON ALL SIDES OF BEVERAGE ALCOVE.

(9 RI) NEW FRAMED ARTWORK. SEE SHEET A2.0 AND A8.1.

(10 RI) CABINETS AND COUNTER TOP TO MATCH CUSTOMER COUNTER FINISHES

(11 RI) 2" X 2" SS CORNER/ END WALL CHANNEL GUARD, FULL HEIGHT.

(12 RI) STAINLESS WRAP TO FINISH OFF UNDERSIDE OF BULKHEAD.

(13 RI) SERVICE COUNTER. REFER TO SHEET A2.0.

(14 RI) PROVIDE STAINLESS SHROUD TO COVER REFRIGERATION LINES ABOVE SELF

(15 RI) "DRIVE THRU OPEN LATE" SIGN. INSTALL ON STREET SIDE.

(16 RI) 1/2 PLYWOOD BACKING (150"X18") TO BE INSTALLED BEHIND THE DRYWALL/FINISHED WALL SURFACE FOR DIGITAL MENU BOARDS.

(17 RI) DECORATIVE METAL BLACK TRIM AT EXPOSED EDGES AND OUTSIDE CORNERS OF POS COUNTER. REFER TO DETAIL 3/A6.1

ADA NOTES (AD)

(1 AD) ACCESSIBLE SIGNAGE. VERIFY LOCAL REQUIREMENTS.

(2 AD) PROVIDE TACTILE EXIT SIGN AT EGRESS DOOR PER "TACTILE SIGN" DETAIL ON ADA1.1 WHEN EXISTING IS NOT PROVIDED.

(3 AD) INSTALL "ASK IF YOU NEED ASSISTANCE SIGN."

KEY NOTES A

GLMV ARCHITECTURE, PLLC
6565 Dodge Street, Suite 100
Omaha, NE 68132
Tel: (316) 265-9347 Fax: (316) 265-5846
www.glmv.com

MARK D. McCLUGGAGE
LICENSED
2511
KANSAS
PROFESSIONAL ARCHITECT
09-17-2020

18071.18005

6	08.03.20	UPDATED BLDG. CODE
5	09.10.20	RTC

CONTRACT DATE: 04.29.19
BUILDING TYPE: SUCCESSOR
PLAN VERSION: DEC 2017
BRAND DESIGNER: DY
SITE NUMBER:
STORE NUMBER: 34386

TACO BELL
14880 S. HARRISON
OLATHE, KS

ROYAL CITY BELL, LLC
A Franchisee of Taco Bell

SUCCESSOR
HERITAGE

INTERIOR ELEVATIONS DINING ROOM

A8.0

PLOT DATE:

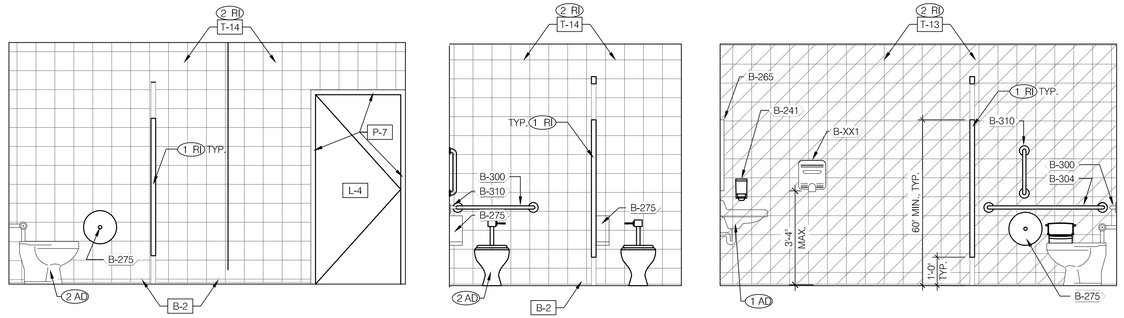

3 2 1

WOMEN'S RESTROOM 3/8"=1'-0"

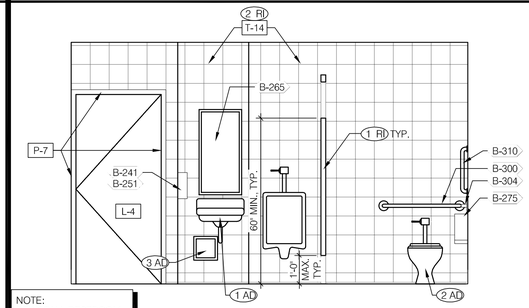

NOTE:
REINSTALL RESTROOM FIXTURES PER DETAIL 3/ADA1.0.

5

MEN'S RESTROOM 3/8"=1'-0"

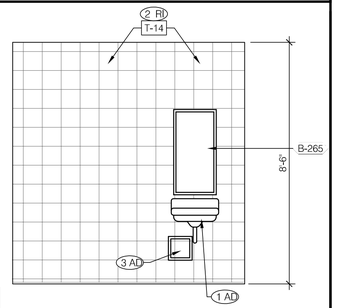

NOTE: REFER TO SHEET ADA1.0 FOR MOUNTING HEIGHTS AND CLEARANCES OF ACCESSORIES AND FIXTURES.

4

WOMEN'S RESTROOM 3/8"=1'-0"

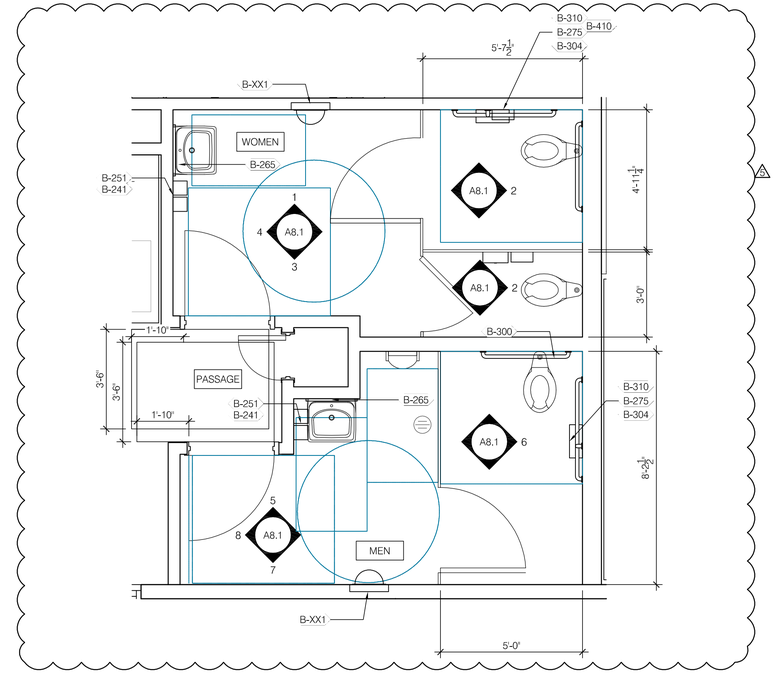

A

ENLARGED RESTROOM PLAN 1/2"=1'-0" **A**

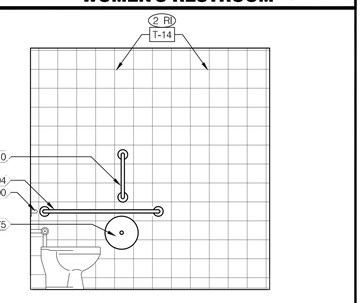

7

6

MEN'S RESTROOM 3/8"=1'-0"

NOT USED

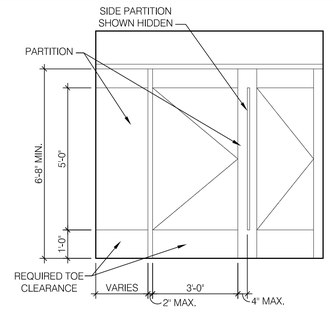

TYP. PARTITION DETAIL 3/8"=1'-0" **C**

NO.	QTY.	MINIMUM EQUIPMENT REQUIRED	MFR. & MODEL NUMBER	BID
B - CONTRACTOR BUILDING ELEMENTS				
B-241	2	SOAP DISPENSER (WALL MOUNT)	KAY 3741	AD
B-251	2	SANITIZER DISPENSER (WALL MOUNT)	KAY 3741	AD
B-265	2	MIRROR, 18" X 36"	BOBRICK #B-165-1836 SURFACE MTD	AD
B-275	2	TOILET PAPER DISPENSER	BOBRICK B2890 SURFACE MTD	AD
B-XX1	2	ELECTRIC HAND DRYER	XLERTATOR SURFACE MTD	AD
B-253	2	COMBO PAPER TOWEL DISPENSER/TRASH RECEPT. (OPTIONAL IN LIEU OF B-290)	BOBRICK #B-3944 SEMI-RECESSED MTD (HAS 4" PROJECTION)	AD
B-300	2	GRAB BAR 1-1/2"DIA X 36" S.S. FIN.	BOBRICK #B6806X36 SURFACE MTD	AD
B-304	2	GRAB BAR 1-1/2"DIA X 48" S.S. FIN.	BOBRICK #B6806X48 SURFACE MTD	AD
B-310	2	GRAB BAR 1-1/2"DIA X 18" S.S. FIN.	BOBRICK #B6806X18 SURFACE MTD	AD
B-410	1	SANITARY WASTE RECEPTACLE	RUBBERMAID #6140 INCLUDES ACCESSORY KIT & MOUNTING HARDWARE	AD

NOTE:
REINSTALL RESTROOM FIXTURES PER DETAIL 3/ADA1.0.

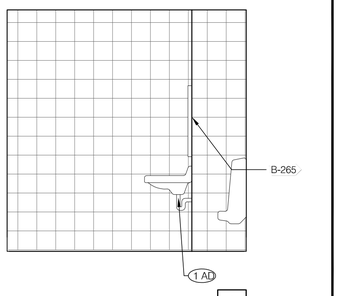

8

MEN'S RESTROOM 3/8"=1'-0"

REMODEL IMAGE (RI)

(1 RI) TOILET PARTITIONS, SEE DETAIL 'B':
MFR: BOBRICK
TYPE: DURALINE SERIES 1080
COLOR: BRUSHED ALUMINUM 0328 FH

(2 RI) WALL TILE AS INDICATED, SEE GENERAL NOTES #8.

ADA NOTES (AD)

(1 AD) INSTALL PIPE WRAP ON ALL EXPOSED DRAIN AND SUPPLY LINES.

(2 AD) INSTALL FLUSH VALVE ON WIDE SIDE OF TOILET STALL.

(3 AD) INSTALL CONTROL VALVE FOR AUTOMATIC FAUCET IN WALL. PROVIDE STAINLESS STEEL ACCESS PANEL.

1. PROVIDE PROPER 2x BLOCKING AT WALL RECESSED MOUNTED ACCESSORIES.
2. GRAB BARS, FASTENERS AND MOUNTING DEVICES SHALL BE INSTALLED PER ADA REQUIREMENTS, REFER TO SHEET ADA1.0.
3. REFER TO FLOOR PLAN NOTES ON SHEET A1.0 FOR BLOCKING AND SUBSTRATE NOTES.
4. LOCATE FLUSH HANDLE ON WIDE SIDE OF STALL.
5. PROVIDE WALL TILE BEHIND ENTIRE MIRROR AREA TO ALIGN MOUNTING SURFACES.
6. REFER TO ACCESSIBILITY CODES FOR MOUNTING HEIGHTS AND CLEARANCES OF ACCESSORIES AND FIXTURES.
7. ALL DIMENSIONS THIS DRAWING ARE TO FINISH SURFACE.
8. PROVIDE 5/8" CEMENTITIOUS BOARD SUBSTRATE FULL HEIGHT BEHIND ALL NEW TILED WALLS.
9. PROVIDE 1/4" MAX GAP AT ALL TOILET PARTITION PANEL JOINTS.
10. ▭ DENOTES FINISH MATERIAL. REFER TO SHEET A7.2 FOR FINISH SCHEDULE.
11. ____ DENOTES NEW TOILET ROOM ACCESSORIES.

KEY NOTES **B**

GLMV ARCHITECTURE, PLLC
1525 E. Douglas Wichita, KS 67211
Tel: (316) 265-6367 Fax: (316) 265-5646
www.glmv.com

MARK D. McGLUNGABE
LICENSED
2511
KANSAS
PROFESSIONAL ARCHITECT

09-17-2020

18071.18005

1	08.03.20	UPDATED BLDG. CODE
2	09.10.20	RTC

CONTRACT DATE: 04.29.19
BUILDING TYPE: SUCCESSOR
PLAN VERSION: DEC 2017
BRAND DESIGNER: DY
SITE NUMBER:
STORE NUMBER: 34386

TACO BELL
14880 S. HARRISON
OLATHE, KS

ROYAL CITY BELL, LLC
A Franchisee of Taco Bell

SUCCESSOR
HERITAGE

INTERIOR ELEV. ENLARGED RESTROOM

A8.1

PLOT DATE:

TOTAL SEATS	ACCESSIBLE SEATS
1 - 20	1
21-40	2
41-60	3
61-80	4
81-100	5
101-120	6
121-140	7

NUMBER OF ACCESSIBLE SEATS

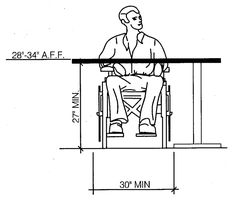

ELEVATION

SEATING AND TABLES N.T.S. 18

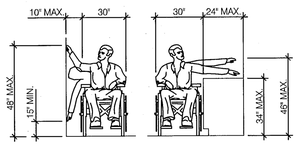

EXAMPLE: DRINK MACHINE, ETC.

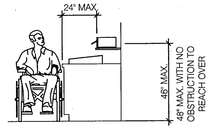

CONDIMENTS

REACH RANGES N.T.S. 14

NOTES:

1. TOP OF GRIPPING SURFACE 33" TO 36" MAX TO THE TOP OF THE BAR. SEE NOTES BELOW
2. 12" MINIMUM CLEAR ABOVE GRAB BAR

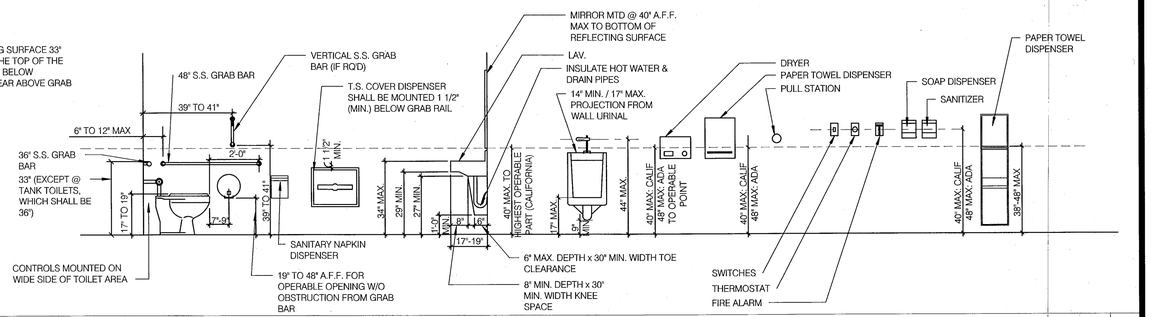

MOUNTING HTS. & CLEARANCE FOR ACCESSIBILITY BY THE DISABLED N.T.S. 1

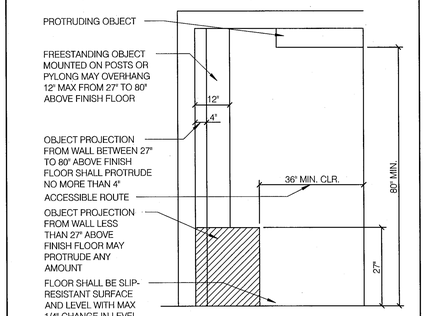

INT. ACCESS. ROUTE CLEARANCES 1/2" = 1'-0" 10

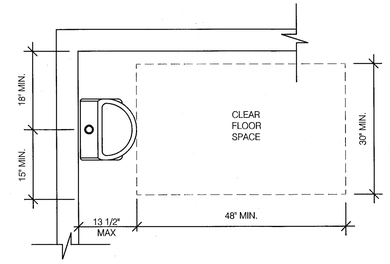

ACCESSIBLE URINAL 3/4" = 1'-0" 6

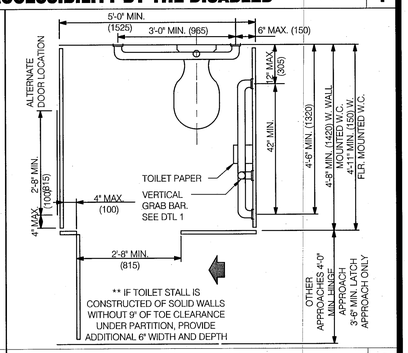

STANDARD TOILET STALL N.T.S. 2

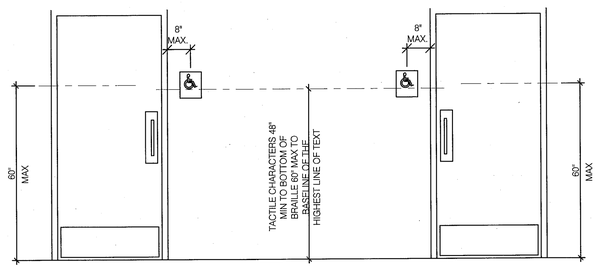

ACCESSIBLE RESTROOM DOORS N.T.S. 15

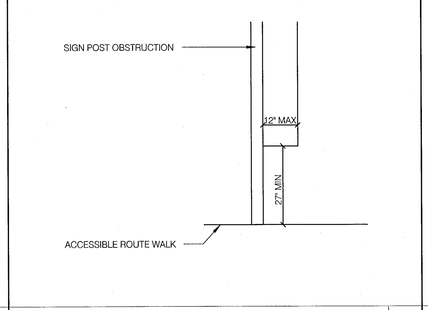

PROTRUDING HAZARDS 1/2" = 1'-0" 11

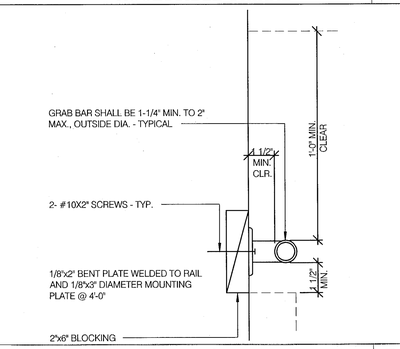

GRAB BAR 3" = 1'-0" 7

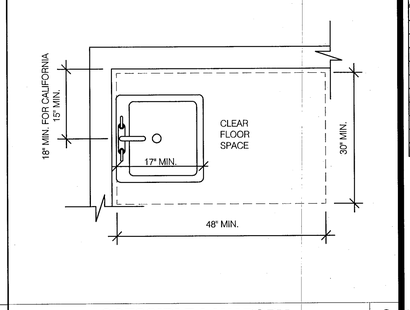

ACCESSIBLE LAVATORY 3/4" = 1'-0" 3

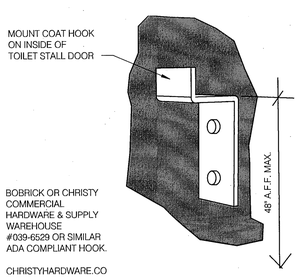

NOTE: SEE DOOR SCHEDULE. AND DOOR SCHEDULE NOTES

COAT HOOK N.T.S. 20

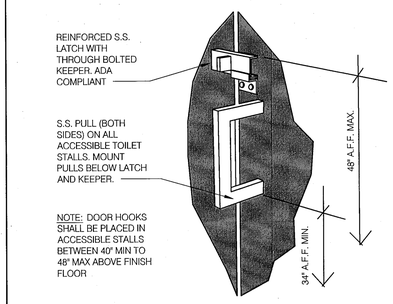

NOTE: SEE DOOR SCHEDULE. AND DOOR SCHEDULE NOTES

PARTITION DOOR LATCH @ PULL 16

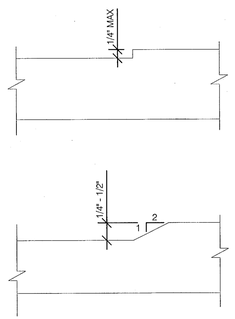

CHANGES IN LEVEL N.T.S. 12

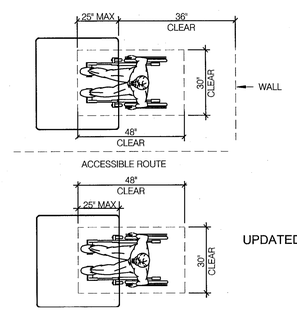

UPDATED DETAIL

DINING ROOM SEATING CLEARANCES N.T.S. 8

1. INDICATED DIMENSIONS, HEIGHTS, DEPTHS, AREAS AND OTHER GRAPHIC INFORMATION ARE PROVIDED AS MINIMUMS THAT MUST BE MAINTAINED. THESE MINIMUMS ARE BASED UPON YUM STANDARDS AND MAY EXCEED ADA REQUIREMENTS.
2. THE DETAILS SHOWN ARE CONCEPTUAL ONLY AND INTENDED TO SHOW ABSOLUTE MINIMUMS AND SHALL BE COORDINATED WITH THE OTHER CONSTRUCTION DOCUMENTS ASSOCIATED WITH THIS PROJECT.
3. 60" TURNING SPACE
   - PERMITTED OVERLAP LIMITED TO 1 ARM OF T-SHAPED SPACE
   - CAN OVERLAP FIXTURE & DOOR CLEARANCE
   - DOOR CAN SWING INTO TURNING SPACE A MAXIMUM OF 12"
4. RESTROOM, IN GENERAL, DOOR SWING MUST BE OUTSIDE OF THE FIXTURE CLEAR FLOOR SPACE HOWEVER A DOOR CAN SWING INTO FIXTURE CLEAR FLOOR SPACE IF WHEELCHAIR SPACE 30"X48" IS PROVIDED BEYOND THE DOOR SWING.
5. TOILET ROOM MUST ALLOW FOR SIDE TRANSFER - 42" BETWEEN FIXTURES
6. ALL BARRIER FREE SIGNS SHALL BE WHITE ON A BLUE BACKGROUND.

GENERAL NOTES 4

GLMV ARCHITECTURE, PLLC
4600 MAIN, SUITE 200
KANSAS CITY, MO 64111
Tel: (816) 256-5587 Fax: (816) 256-5546
www.glmv.com

MARK V. McCLUGGAGE
LICENSED
2511
10/16/20
KANSAS
PROFESSIONAL ARCHITECT

18071.18005

3	06.03.20	UPDATED BLDG. CODE

CONTRACT DATE:	04.29.19
BUILDING TYPE:	SUCCESSOR
PLAN VERSION:	DEC 2017
BRAND DESIGNER:	DY
SITE NUMBER:	
STORE NUMBER:	34386

TACO BELL
14880 S. HARRISON
OLATHE, KS

ROYAL CITY BELL, LLC
A Franchisee of Taco Bell

SUCCESSOR OR HERITAGE

ACCESSIBILITY REQUIREMENTS

ADA1.0

PLOT DATE:

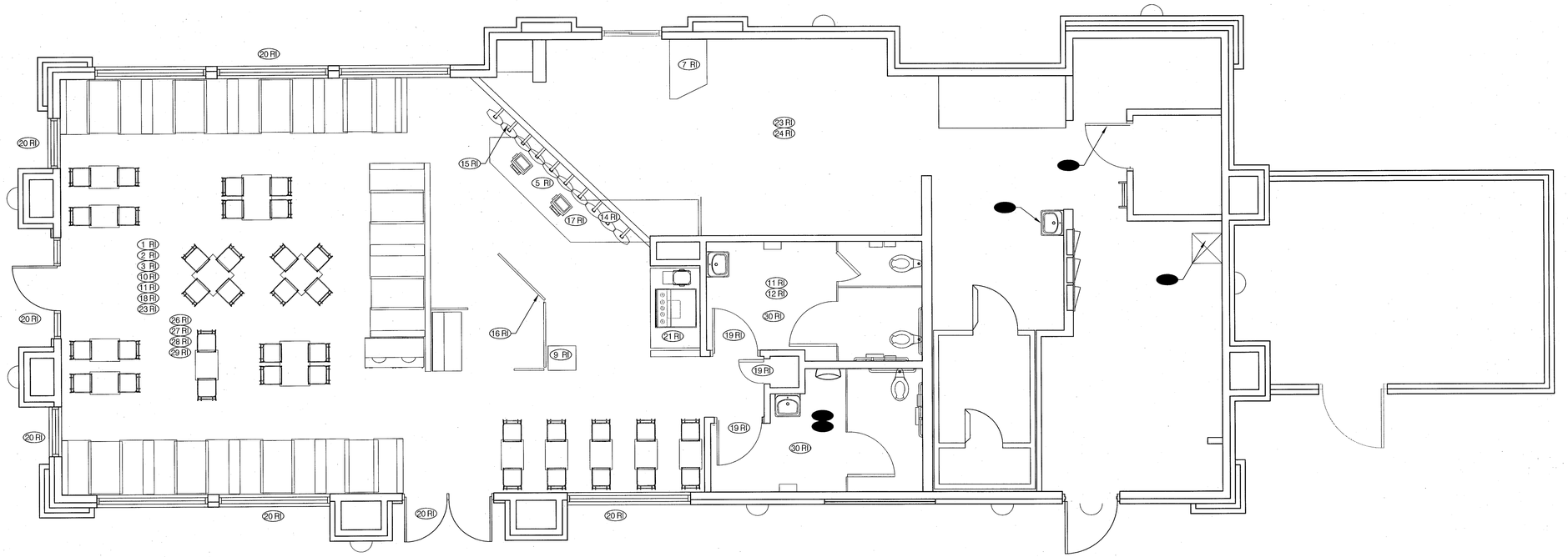

DEMOLITION FLOOR PLAN 3/16"=1'-0" A

TYPICAL EXISTING EXTERIOR WALL: 2x6 WOOD STUDS @16" O.C. w/ 1/2" PLYWOOD (EXP 1) SHEATHING.

TYPICAL EXISTING INTERIOR WALL TO REMAIN: 2x4 WOOD STUDS @16" O.C. (U.N.O.)

DEMO ITEMS AS INDICATED (SEE KEY NOTES)

DEMOLITION LEGEND F

A. INSPECT INTERIOR AND EXTERIOR WALLS. REPLACE ANY DAMAGED SUBSTRATE WALLS ETC. INSPECT DINING ROOM WINDOWS & WALLS BELOW WINDOWS FOR EVIDENCE OF MOISTURE DAMAGE & IMPROPERLY INSTALLED FLASHING. VERIFY WITH OWNER.

B. ROOF RECOMMENDATIONS: INSPECTION OF EXISTING ROOF BY QUALIFIED ROOFER IS RECOMMENDED. REPLACE ROOF IF WARRANTED. VERIFY ALL ACTIONS WITH OWNER.

C. SEE SITE PLAN FOR ANY SITE DEMO WORK.

D. POS, SECURITY, SAFE, DRINK SYSTEM AND FRUTISTA MACHINE SHALL BE TEMPORARILY RELOCATED PER STORE MANAGERS DIRECTION, BY AUTHORIZED TECHNICIANS. OWNER SHALL COORDINATE. SEE 3RD PARTY SCOPE OF WORK.

DEMOLITION NOTES D

REMODEL IMAGE (RI)

(1 RI) REMOVE AND DISCARD ALL DINING AREA SEATS, TABLES, AND TRASH ENCLOSURES.

(2 RI) REMOVE ALL EXISTING TILE FLOORING & COVE BASE IN DINING AREA, CUSTOMER AREA, ALCOVE, WOMEN'S RESTROOM & MEN'S RESTROOM.

(3 RI) REMOVE WAINSCOT, CHAIR RAIL, AND SUBSTRATE IN DINING ROOM AND ALCOVE.

(4 RI) GENERAL CONTRACTOR TO REVIEW AND PROVIDE SPECIFIC STUCCO / E.I.F.S. AREAS IN NEED OF PATCHING / REPAIR. MATCH TEXTURE.

(5 RI) EXISTING POS COUNTER TO REMAIN. PREP CUSTOMER FACING SURFACES FOR NEW FINISHES. RESURFACE/REPLACE COUNTERTOP AS REQUIRED. REFER TO SHEET A7.2 FOR FINISHES.

(6 RI) REMOVE AND REPLACE EXISTING HANDSINK WITH NEW SEE - A2.0

(7 RI) REMOVE EXISTING BUILT IN COUNTER

(8 RI) REMOVE EXISTING DRINK TABLE, PEPSI AND ICE MACHINES. SAVE PEPSI AND ICE MACHINES FOR REINSTALLATION.

(9 RI) RELOCATE EXISTING KIOSK STATION - SEE A2.0 FOR NEW LOCATION

(10 RI) PATCH AND REPAIR CONCRETE SLAB, PREP FOR NEW FLOOR FINISHES.

(11 RI) REMOVE EXISTING WALL TILE & SUBSTRATE AT DINING ROOM, POS, RESTROOMS AND ALCOVE. REPLACE SUBSTRATE AS REQUIRED FOR NEW FINISHES.

(12 RI) REMOVE AND DISCARD EXISTING RESTROOM FIXTURES, PARTITIONS AND ACCESSORIES.

- REMOVE EXISTING OFFICE DOOR - PAINT FRAME.
- EXISTING SAFE TO BE RELOCATED TO POS, COORDINATE WITH CONSTRUCTION MANAGER.
- REMOVE REVOLUTION MENU BOARDS.
- REMOVE QUEUE RAIL.
- POS REGISTERS SHOULD NOT BE DISCONNECTED FROM NETWORK UNLESS PAR TECHNICIAN IS PRESENT. RELOCATE DURING CONSTRUCTION.
- EXISTING SUBSTRATE TO BE REMOVED BELOW EXISTING WINDOWS TO INSPECT FRAMING FOR DAMAGE. REPLACE AS REQUIRED.
- REMOVE CLOSET AND RESTROOM DOOR, FRAME AND HARDWARE.
- PROTECT EXISTING STOREFRONT & DOOR OR WINDOW & FRAME FROM DAMAGE DURING CONSTRUCTION.
- EXISTING DRINK TABLE, TEA URNS, PEPSI AND ICE MACHINES TO REMAIN. SAVE FOR REINSTALLATION.
- REMOVE AND REPLACE EXISTING MOP SINK
- REMOVE EXISTING CEILING GRID AND TILES. EXISTING FLEX DUCTWORK TO REMAIN
- REMOVE FLUORESCENT LIGHT FIXTURES IN KITCHEN.
- REPLACE EXISTING GRILLES/DIFFUSERS WITH NEW IN SAME LOCATION. EXISTING DUCTWORK TO REMAIN.
- REMOVE EXISTING EMERGENCY EGRESS/EXIT LIGHTING.
- REMOVE EXISTING LIGHT FIXTURES IN DINING ROOM, RESTROOMS AND ALCOVE.
- REMOVE EXISTING CEILING TILES. REPAIR EXISTING T-BAR CEILING TO LIKE NEW CONDITION AND PAINT. REFER TO A7.2 FOR FINISH.
- EXISTING SPEAKER TO REMAIN. TEMPORARILY SUPPORT FIXTURE AND PREP GRILLE FOR NEW PAINT.
- REPLACE EXISTING SUPPLY AND EXHAUST GRILLES/DIFFUSERS IN RESTROOM WITH NEW IN SAME LOCATION. REFER TO MECHANICAL SHEET FOR SCHEDULE.

DEMOLITION KEY NOTES B

GLMV ARCHITECTURE, P.L.L.C
1525 E Douglas Wichita, KS 67211
Tel: (316) 265-9344 Fax: (316) 265-5446
www.glmv.com

MARK D. McCLURGAGE
2511
KANSAS
PROFESSIONAL ARCHITECT

18071.18005

3	08.03.20	UPDATED BLDG. CODE

CONTRACT DATE: 04.29.19
BUILDING TYPE: SUCCESSOR
PLAN VERSION: DEC 2017
BRAND DESIGNER: DY
SITE NUMBER:
STORE NUMBER: 34386

TACO BELL
14880 S. HARRISON
OLATHE, KS

ROYAL CITY BELL, LLC
A Franchisee of Taco Bell

SUCCESSOR
HERITAGE

DEMO FLOOR PLAN

D1.0

PLOT DATE:

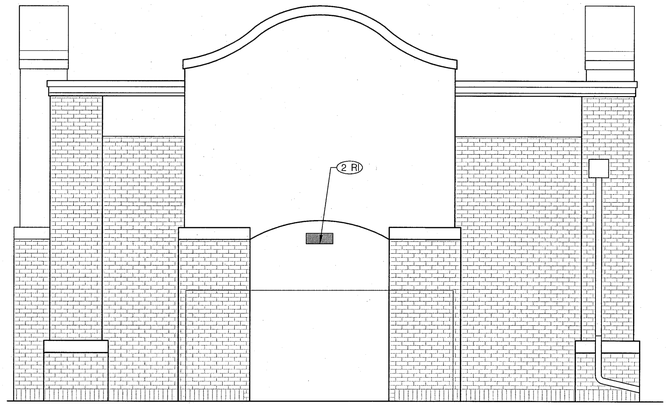

REAR ELEVATION 1/4"=1'-0" | **B**

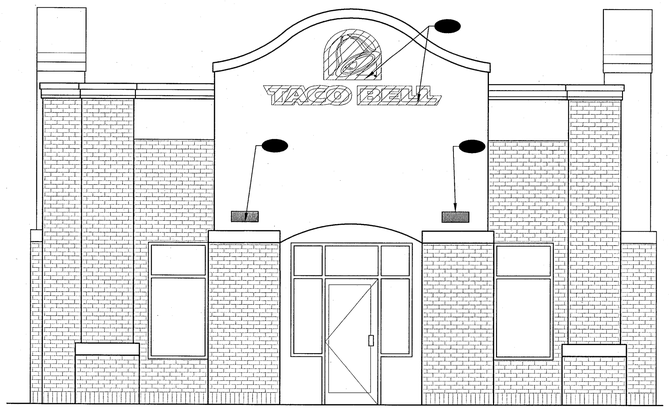

FRONT ELEVATION 1/4" = 1'-0" | **A**

EXISTING TO BE REMOVED

DEMOLITION LEGEND | **E**

REMODEL IMAGE (RI)

1 RI EXISTING BUILDING SIGNS TO BE REMOVED.

2 RI REMOVE AND REPLACE EXISTING EXTERIOR LIGHTING.

DEMOLITION LEGEND | **F**

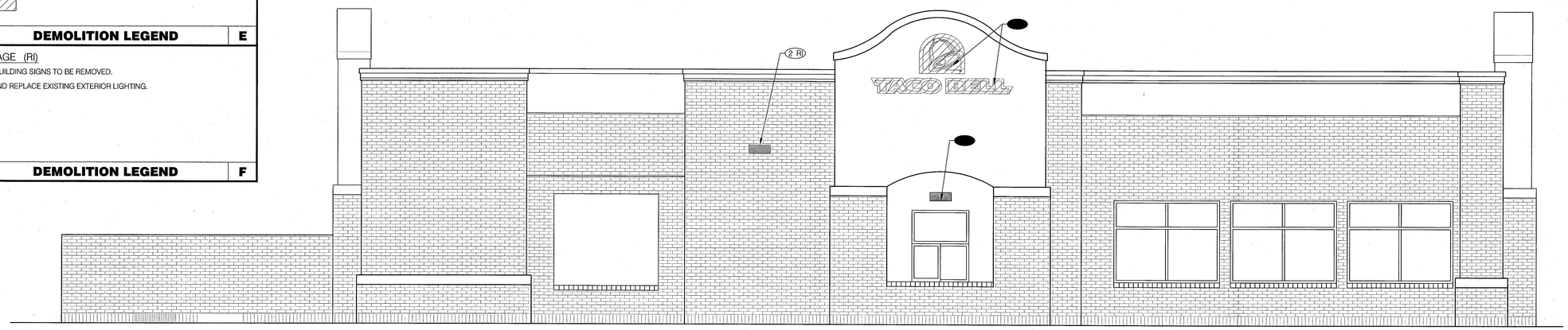

WALK UP SIDE ELEVATION 1/4" = 1'-0" | **C**

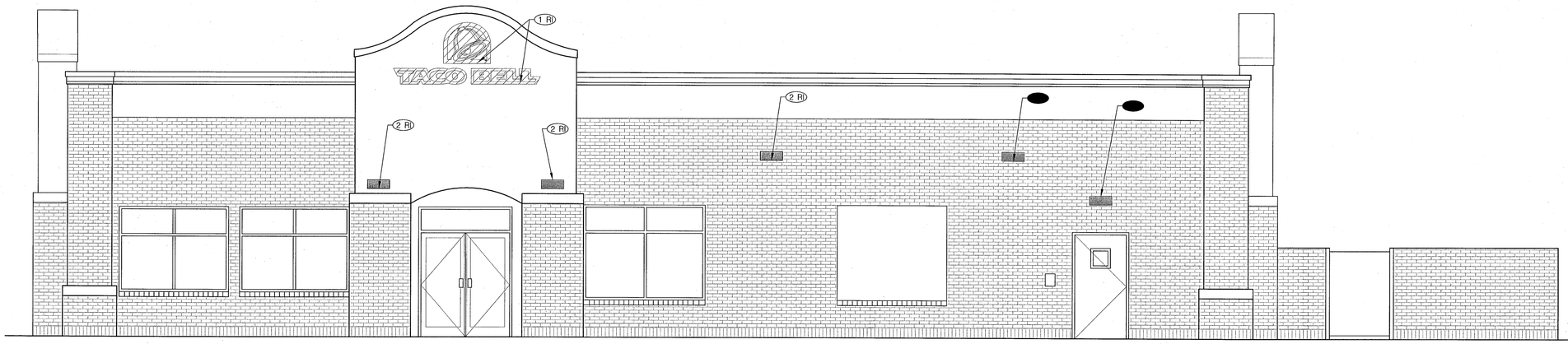

DRIVE THRU SIDE ELEVATION 1/4" = 1'-0" | **D**

GLMV ARCHITECTURE, PLLC
1525 E. Douglas Wichita, KS 67211
Tel: (316) 265-9367 Fax: (316) 265-5646
www.glmv.com

MARK D. McCLOGGAGE
LICENSED
2511
KANSAS
PROFESSIONAL ARCHITECT

18071.18005

3	08.03.20	UPDATED BLDG. CODE

CONTRACT DATE:	04.29.19
BUILDING TYPE:	SUCCESSOR
PLAN VERSION:	DEC 2017
BRAND DESIGNER:	DY
SITE NUMBER:	
STORE NUMBER:	34386

TACO BELL
14880 S. HARRISON
OLATHE, KS

ROYAL CITY BELL, LLC
A Franchisee of Taco Bell

SUCCESSOR
HERITAGE

DEMOLITION EXTERIOR ELEVATIONS

D3.0

PLOT DATE: