1 SYMBOLS/LEGEND

- REFERENCE TO ELEVATION NUMBER / REFERENCE TO SHEET NUMBER
- REFERENCE TO DETAIL NUMBER / REFERENCE TO SHEET NUMBER
- REFERENCE TO SECTION NUMBER / REFERENCE TO SHEET NUMBER
- COLUMN GRID LINE DESIGNATION
- PARTITION TYPE
- DOOR NUMBER (SEE DOOR SCHEDULE)
- INTERIOR ELEVATIONS
- CORRIDOR 110 — ROOM NAME AND NUMBER
- 110 / 0'-0" — ROOM NUMBER, CEILING HEIGHT (SEE CEILING PLANS)
- EXISTING WALL CONSTRUCTION TO REMAIN
- EXISTING WALL CONSTRUCTION TO BE REMOVED
- NEW DRYWALL PARTITION
- NEW MASONRY PARTITION
- EXISTING DOOR AND/OR FRAME TO BE REMOVED
- EXISTING DOOR AND FRAME TO REMAIN
- NEW DOOR AND FRAME IN GYPSUM BOARD WALL
- NEW DOOR AND FRAME IN MASONRY WALL
- EXISTING WALL TO BE PATCHED
- SMFE — SURFACE MOUNTED FIRE EXTINGUISHER (10 LBS, TYPE SUITABLE FOR FIRE TYPE)
- WINDOW TYPE
- FINISH TAG
- T/SLAB ELEV. 0'-0" — ELEVATION TAG
- REVISION TAG

2 ABBREVIATIONS

AIR CONDITIONING	A/C	JANITOR'S CLOSET	JC
ACOUSTICAL	AC	LAMINATE (D)	LAM
ACCESS	ACC	LAVATORY	LAV
ACOUSTICAL PANEL	ACP	LIVELOAD	LL
ACOUSTICAL TILE	ACT	LOW POINT	LP
ADDENDUM	ADD	MAXIMUM	MAX
ADJACENT	ADJ	MATERIAL	MATL
ABOVE FINISH FLOOR	AFF	MECHANICAL	MECH
ALTERNATE	ALT	MANUFACTURE (R) (D)	MFR (D)
ALUMINUM	ALUM	MINIMUM	MIN
ARCHITECT (URAL)	ARCH	MIRROR	MIR
ABOVE RAISED FLOOR	ARF	MASONRY OPENING	MO
BOARD	BD	METAL	MTL
BUILDING	BLDG	NORTH	N
BLOCK	BLK	NOT IN CONTRACT	NIC
BOTTOM OF	BO	NUMBER	NO
BEARING	BRG	NOMINAL	NOM
BRICK	BRK	NOT TO SCALE	NTS
BASEMENT	BSMT	OVERALL	OA
BUILT UP ROOFING	BUR	ON CENTER	OC
CABINET	CAB	OVERHEAD OR OPPOSITE HAND	OH
CATCH BASIN	CB	OPENING	OPNG
CABLE HOLE IN CEILING	CBIC	OPPOSITE	OPP
CABLE HOLE IN FLOOR	CBIF	POURED CONCRETE	PC
CEMENT	CEM	PLATE	PL
CLOSED CIRCUIT T.V.	CCTV	PLASTIC	PL
CAST IRON	CI	LAMINATE	LAM
CENTER LINE	CL	PANEL	PNL
CEILING	CLG	PARTITION	PTN
CLOSET	CLO	POLYVINYL CHLORIDE	PVC
CLEAR (ANCE)	CLR	RISER	R
CONCRETE MASONRY UNIT	CMU	RAISED ACCESS	RA
COUNTER	CNTR	RADIUS	RAD
COLUMN	COL	REFLECTED CEILING PLAN	RCP
CONCRETE	CONC	ROOF DRAIN	RD
CONSTRUCTION	CONST	RTU ROOF TOP UNIT	RO
CONTRACT (OR)	CONTR	REFERENCE	REF
CORRIDOR	CORR	REFRIGERATOR	REFG
CARPET	CPT	REINFORCED	REINF
CERAMIC TILE	CT	RESILIENT	RES
CENTER	CTR	ROOFING	RFG
DEMOLITION	DEMO	ROOM	RM
DEPARTMENT	DEPT	ROUGH OPENING	RO
DRINKING FOUNTAIN	DF	SOUTH	S
DIAMETER	DIA	SPLASH BLOCK	SB
DIAGONAL	DIAG	SOLID CORE WOOD DOOR	SCW
DIMENSION	DIM	STORM DRAIN	SD
DIVISION	DIV	SECTION	SECT
DEAD LOAD	DL	SQUARE FOOT	SF
DOWN	DN	SIMILAR	SIM
DAMP PROOFING	DP	STRUCTURAL INSULATED PANEL	SIP
DOOR	DR	SPECIFICATION(S)	SPEC(S)
DOWNSPOUT	DS	SPRINKLER	SPR
DETAIL	DTL	SQUARE	SQ
DRAWING	DWG	SECONDARY ROOF DRAIN	SRD
DRAWER	DWR	STANDARD	STD
EAST	E	STEEL	STL
EACH	EA	STORAGE	STOR
EXHAUST FAN	EF	SUSPENDED	SUSP
ELECTRIC (AL)	ELEC	TREAD	T
ELEVATION	ELEV	TELEPHONE	TEL
EMERGENCY	EMERG	THICK(NESS)	THK
ENCLOSE (ENCLOSURE)	ENCL	TOP OF STEEL	TOS
EXPANDED POLYSTYRENE	EPS	TOP OF TYPICAL	TYP
EQUAL	EQ	UNLESS OTHERWISE NOTED	UON
EACH WAY	EW	VINYL COMPOSITE TILE	VCT
ELECTRIC WATER COOLER	EWC	VIDEO DISPLAY TERMINAL	VDT
EXCAVATE	EXC	VERIFY IN FIELD	VIF
EXHAUST	EXH	VINYL WALL COVERING	VWC
EXISTING	EXIST	WEST	W
EXPANSION JOINT	EJ	WITH	W/
EXTERIOR	EXT	WALL BASE	WB
FLOOR DRAIN	FD	WATER CLOSET	WC
FOUNDATION	FDN	WOOD	WD
FIRE EXTINGUISHER	FE	WIRE MESH	WM
FINISH (ED)	FIN	WITHOUT	W/O
FIXTURE	FIXT	WATERPROOFING	WP
FLOOR (ING)	FLR	WELDED WIRE MESH	WWM
FIREPROOF	FP	WELDED WIRE FABRIC	WWF
FIREPROOF SELF-CLOSING	FPSC		
FEET	FT		
FOOTING	FTG		
GAGE, GAUGE	GA		
GALVANIZED	GALV		
GENERAL CONTRACT (OR)	GC		
GROUND FAULT INTERRUPT GLASS,	GFI		
GLAZING	GL		
GYPSUM BOARD WALL	GWB		
HOLLOW CORE	HC		
HEADER	HDR		
HARDWARE	HDW		
HEIGHT	HGT		
HOLLOW METAL	HM		
HIGH POINT	HP		
HEATING	HTG		
HEATING VENTILATION & AIR CONDITIONING	HVAC		
INSULATED CONCRETE FORM	ICF		
ISOLATED GROUND	IG		
INCH	IN		
INSULATION (D) (ION)	INSUL		

REVIEWED FOR CODE COMPLIANCE
City Planning & Development
Development Services
City of Kansas City, Missouri
Jeff Lee, P.E., M.C.P
Building Official
Date: 01/18/2022 By: jnewport

3 GENERAL NOTES

1. ALL WORK SHALL BE DONE IN STRICT ACCORDANCE WITH PROVISIONS OF LOCAL, STATE, AND FEDERAL, LAWS, ORDINANCES, AND REGULATIONS WHEREVER APPLICABLE. NOTIFY DESIGNATED REPRESENTATIVE OF ANY WORK FOUND NOT TO BE IN COMPLIANCE PRIOR TO COMMENCEMENT OF WORK.
2. EACH CONTRACTOR SHALL BECOME FAMILIAR WITH THE SCOPE OF WORK AND SHALL BE HELD TO HAVE VISITED THE SITE AND TO HAVE VERIFIED ALL EXISTING CONDITIONS PRIOR TO SUBMISSION OF BID.
3. IN ALL CASES, DRAWINGS SHALL NOT BE SCALED FOR INFORMATION. FIGURED DIMENSIONS AND CONDITIONS MUST BE VERIFIED IN THE FIELD.
4. CONTRACTOR SHALL VERIFY AND BE RESPONSIBLE FOR ALL FIELD DIMENSIONS AND JOB CONDITIONS, AND SHALL NOTIFY THE DESIGNATED REPRESENTATIVE OF ANY DISCREPANCIES, CONFLICTS, AND/OR OMISSIONS WHICH WOULD INTERFERE WITH THE SATISFACTORY COMPLETION OF THE WORK. SHOULD HE FAIL TO FOLLOW THIS PROCEDURE AND CONTINUE WITH THE WORK, HE SHALL ASSUME ALL RESPONSIBILITY AND LIABILITY ARISING THEREFROM. ALL DIMENSIONS ARE SHOWN TO FACE OF FINISHES UNLESS OTHERWISE NOTED.
5. ALL ITEMS OF WORK IDENTIFIED ON THE DRAWINGS BY NAME, NOTE, OR MATERIAL DESIGNATION ARE NEW, UNLESS OTHERWISE NOTED.
6. ALL NEW MATERIALS AND INSTALLATIONS SHALL BE IN ACCORDANCE WITH THE MANUFACTURERS LATEST PRINTED SPECIFICATIONS, AND WITH ALL APPLICABLE CODE REQUIREMENTS.
7. ALL WORK SHALL BE PERFORMED IN ACCORDANCE WITH BEST STANDARD TRADE PRACTICES. EACH TRADE SHALL COOPERATE WITH OTHER TRADES TO FACILITATE JOB SCHEDULING AND COMPLETION.
8. PROPRIETARY NAMES IDENTIFY SPECIFIC PRODUCTS OR ITEMS THAT ARE TO BE PROVIDED. NO SUBSTITUTIONS ARE PERMITTED UNLESS AUTHORIZED IN WRITING BY THE DESIGNATED REPRESENTATIVE.
9. GC IS RESPONSIBLE FOR PROTECTING WORK AREAS AND MATERIALS FROM THEFT, VANDALISM, AND OTHER LOSSES.
10. EACH CONTRACTOR SHALL BE RESPONSIBLE FOR ANY DAMAGE TO ADJOINING REMAINING AREAS AS A RESULT OF HIS WORK, AND SHALL REPAIR DAMAGED SURFACES TO THEIR PRE-EXISTING CONDITIONS OR AS MAY BE REQUIRED TO COMPLETE THE ENTIRE SCOPE OF THE WORK.
11. GC IS RESPONSIBLE FOR PROTECTING ALL FINISHED SURFACES FROM UNWANTED PAINT, DIRT, OR OTHER DELETERIOUS MATERIALS.
12. ALTERATIONS TO EXISTING WORK SHALL BE PATCHED AND FINISHED, AS NECESSARY, TO MATCH EXISTING CONTIGUOUS SURFACES OR NEW FINISHES SHOWN.
13. AT THE COMPLETION OF EACH WORKDAY, EACH TRADE SHALL BE RESPONSIBLE FOR CLEANING UP THEIR WORK. RUBBISH REMOVAL SHALL BE DONE IN A DUST INHIBITIVE FASHION, AND THE JOB SITE SHALL BE FREE OF ALL DEBRIS AND BROOM CLEAN UPON COMPLETION.
14. CLEAN ALL FLOORS, WALLS, DOORS, FIXTURES, LIGHTS, MISCELLANEOUS GLASS, ETC. LEAVING JOB FREE OF DUST AND DEBRIS, PRIOR TO PROJECT COMPLETION.
15. GC IS RESPONSIBLE FOR FINAL PATCHING, PAINT TOUCH-UP, AND CLEANING TO LEAVE ALL WORK, INCLUDING WORK PERFORMED UNDER SEPARATE CONTRACTS, CLEAN AND READY FOR OCCUPANCY.
16. EXISTING EQUIPMENT AND MATERIALS TO BE REMOVED, WHICH ARE NOT REQUIRED TO BE RELOCATED OR RETAINED BY THE OWNER AND/OR THE DESIGNATED REPRESENTATIVE, SHALL BECOME THE PROPERTY OF THE CONTRACTOR AND BE REMOVED FROM THE PREMISES.
17. INDICATIONS OF WORK TO BE REMOVED ARE GENERAL ONLY, AND ARE NOT INTENDED TO SHOW ALL ITEMS WHICH MAY REQUIRE REMOVAL. SUCH ITEMS SHALL BE REMOVED, RELOCATED, AND/OR REINSTALLED, AS REQUIRED FOR INSTALLATION OF NEW WORK.
18. THESE DOCUMENTS DO NOT AUTHORIZE DETERMINING THE PRESENCE, NOR THE REMOVAL, OF ASBESTOS OR OTHER HAZARDOUS MATERIALS. IF DURING THE COURSE OF THE PROJECT, ASBESTOS OR OTHER HAZARDOUS MATERIAL CONTAMINATION IS SUSPECTED, THE CONTRACTOR SHALL NOTIFY THE DESIGNATED REPRESENTATIVE WITHIN 24 HOURS. CONTRACTOR SHALL SUSPEND WORK IN THE AFFECTED AREA UNTIL SUCH A TIME THAT SAID AREA IS CERTIFIED CONTAMINATION-FREE. IN THE INTERIM, THE CONTRACTOR SHALL ENDEAVOR TO RESCHEDULE WORK TO AREAS UNAFFECTED BY SUSPECTED CONTAMINATION IN ORDER TO MINIMIZE DELAY TO THE PROJECT SCHEDULE.
19. DRYWALL CONSTRUCTION:
    A. PROVIDE SIZES AND TYPES AS SHOWN ON THE DRAWINGS, TAPED AND SPACKLED WITH THREE (3) COATS AND SANDED SMOOTH.
    B. METAL STUDS SHALL BE MINIMUM 20 GA (33 MILS)., UNLESS OTHERWISE NOTED. FASTEN AT 24" O.C. MAXIMUM UTILIZING FASTENERS SUITABLE FOR THE SUBSTRATE.
    C. PROVIDE ALL METAL CORNER BEADS, STOPS, EDGE TRIM, CASINGS, BEADS, ETC. AS REQUIRED TO FINISH ALL DRYWALL SURFACES WITH FLUSH, LEVEL EDGES.
    D. USE FIRE CODE "X" GYPSUM BOARD WHERE REQUIRED TO OBTAIN FIRE RATINGS PER APPLICABLE BUILDING CODES.
    E. UTILIZING MOISTURE RESISTANT GYPSUM BOARD AT ALL "WET" AREAS.
20. SEE REFLECTED CEILING PLANS FOR CEILING REQUIREMENTS.
21. SEE DOOR SCHEDULE FOR DOOR AND FRAME REQUIREMENTS.
22. PAINT FOR DRYWALL, CONCRETE, AND MASONRY SHALL BE TWO (2) COATS OF BENJAMIN MOORE "EXOSPEC" EGGSHELL LATEX PAINT OVER ONE (1) COAT OF A COMPATIBLE BENJAMIN MOORE QUICK DRY PRIME-SEAL LATEX PRIMER. PAINT FOR MISCELLANEOUS METALS AND TRIM SHALL BE TWO (2) COATS OF BENJAMIN MOORE ODORLESS INTERIOR SEMI-GLOSS "ECOSPEC" PAINT OVER ONE (1) COAT OF A COMPATIBLE BENJAMIN MOORE RUST-INHIBITIVE PRIMER.
23. CERAMIC FLOOR AND WALL TILE SHALL BE INSTALLED IN STRICT ACCORDANCE WITH THE APPLICABLE PROVISIONS OF THE TILE COUNCIL OF NORTH AMERICA HANDBOOK.
24. FLAME SPREAD OF ALL INTERIOR FINISHES SHALL MEET OR EXCEED CLASS "B" (ASTM-E-84) (26 TO 75 FLAME SPREAD AND SMOKE DENSITY OF 450 MAX, PER IBC TABLE 803.9).
25. PROVIDE DRY CHEMICAL "A-B-C" OR TYPE APPROPRIATE FOR THE HAZARD TYPE ENCOUNTERED, 10 lb. CAPACITY FIRE EXTINGUISHERS (F.E.), WHERE INDICATED ON THE FLOOR PLANS AND/OR AS DIRECTED BY THE AUTHORITY HAVING JURISDICTION.
26. ALL PLUMBING, MECHANICAL, AND ELECTRICAL WORK SHALL BE IN FULL CONFORMANCE WITH THE APPLICABLE EDITIONS OF THE PLUMBING CODE, MECHANICAL CODE AND BUILDING CODE (RESPECTIVELY), AND ALL OTHER APPLICABLE CODES AND REGULATIONS.
27. PLUMBING WORK SHALL BE INSTALLED BY A PLUMBER LICENSED WITH THE AUTHORITY HAVING JURISDICTION IN ACCORDANCE WITH THE APPLICABLE PLUMBING CODE AND NATIONAL PLUMBING CODES. GC TO COORDINATE SLAB AND WALL DEMOLITION, AND PATCHBACK NECESSARY FOR PLUMBING WORK.
28. ELECTRICAL WORK SHALL BE INSTALLED BY AN ELECTRICIAN LICENSED WITH THE AUTHORITY HAVING JURISDICTION IN ACCORDANCE WITH THE APPLICABLE BUILDING CODE AND NATIONAL ELECTRICAL CODES. AN ELECTRICAL INSPECTION CERTIFICATE SHALL BE OBTAINED FROM AN INSPECTION AGENCY RECOGNIZED BY THE AUTHORITY HAVING JURISDICTION FOR ALL ELECTRICAL WORK, AND SUPPLIED TO THE DESIGNATED REPRESENTATIVE.
29. ALL WOOD FRAMING, BLOCKING, ETC, SHALL BE FIRE TREATED.
30. ALL WOOD FRAMING, BLOCKING, ETC, IN CONTACT WITH CONCRETE SHALL BE PRESSURE TREATED AND SET IN MASTIC.
31. PROVIDE ANY AND ALL FIRE RETARDANT TREATED WOOD BLOCKING/BACKING OR 14 GA. GALV. FLAT STOCK BACKING AS REQUIRED TO ENSURE PROPER AND ADEQUATE SUPPORT (IN COMPLIANCE WITH BUILDING CODE MINIMUM LOADING REQUIREMENTS WHERE APPLICABLE) OF VARIOUS ITEMS INCLUDING, BUT NOT NECESSARILY LIMITED TO, HANDRAILS, CABINETRY, SHELVING, HANDICAP GRAB BARS, TOILET ACCESSORIES, CABLE TRAYS, CONDUITS, ETC.
32. ALL HANDICAP ACCESSIBILITY WORK SHALL BE PERFORMED IN STRICT ACCORDANCE WITH 2010 ADA, ICC ANSI A117.1-2009, AND BUILDING CODE HANDICAP ACCESSIBILITY GUIDELINES AND REFERENCE STANDARDS.
33. GENERAL CONTRACTOR AND EACH SUB-CONTRACTOR SHALL BE RESPONSIBLE FOR COORDINATING ALL REQUIREMENTS AND ITEMS OF WORK THAT MAY BE REQUIRED TO PROVIDE FOR AND/OR ACCOMMODATE WORK OF OTHER TRADES INCLUDING WORK OF DESIGNATED REPRESENTATIVE SELECTED SECURITY VENDORS, COMMUNICATION VENDORS, AND OTHER VENDORS AS MAY BE ENGAGED. NO EXTRA WILL BE ENTERTAINED DUE TO THE LACK OF SUCH COORDINATION.
34. CONTRACTOR SHALL SUBMIT TO DESIGNATED REPRESENTATIVE ALL CUTS, M.S.D.S. SHEETS, AND SAMPLES OF FINISHES, EQUIPMENT & MATERIALS FOR APPROVAL PRIOR TO ORDERING, FABRICATION, OR COMMENCEMENT OF THE WORK. ALL SUBMISSIONS SHALL BE PROVIDED IN SETS OF FIVE (5) AND TIMED SUCH THAT MATERIAL DELIVERIES & INSTALLATION ACCOMMODATE THE SCHEDULE & COMPLETION DATE ESTABLISHED BY THE DESIGNATED REPRESENTATIVE.
35. FOR PORTIONS OF THE BUILDING THAT REMAIN OCCUPIED DURING CONSTRUCTION, CONTRACTOR SHALL PROVIDE ALL REQUIRED TEMPORARY PARTITIONS, DUST PROTECTION AND SEPARATION REQUIRED TO PROVIDE OCCUPANTS WITH SAFE EGRESS, AND ACCESS TO REQUIRED FACILITIES (I.E. RESTROOMS, ELEC. CLOSETS, ETC.) CONTRACTOR SHALL MINIMIZE DISRUPTION TO OCCUPANTS AS A RESULT OF NOISE, TRAFFIC, PARKING, SITE AND BUILDING ACCESS, ETC.
36. CONTRACTOR SHALL PROVIDE A MINIMUM OF 72 HOURS WRITTEN NOTICE TO DESIGNATED REPRESENTATIVES FOR ANY PLANNED DISRUPTIONS OF BUILDING PLUMBING, MECHANICAL, ELECTRICAL, OR OTHER CRITICAL SYSTEMS SERVICING THE TENANT SPACE.
37. ALL INTENSIVE NOISE PRODUCING ACTIVITIES SUCH AS CORE DRILLING, CONCRETE SLAB CUTTING OR CHOPPING MAY BE PERFORMED OFF HOURS. COORDINATE REQUIREMENTS WITH DESIGNATED REPRESENTATIVES AND INCORPORATE INTO BASE BID.
38. IT IS NOT THE INTENT TO SHOW EACH AND EVERY PART OR COMPONENT OF ANY GIVEN ASSEMBLY, BUT RATHER TO SHOW SYSTEMS IN PLACE DEPICTING THE DESIRED END PRODUCT. CONTRACTOR SHALL PROVIDE ANY AND ALL PERIPHERAL ITEMS THAT MAY REASONABLY BE UNDERSTOOD AS BEING NECESSARY FOR THE COMPLETE AND PROPER EXECUTION OF THE WORK. THE COST FOR THESE ITEMS SHALL BE INCORPORATED INTO THE CONTRACTORS BASE BID. NO EXTRA WILL BE ENTERTAINED DUE TO LACK OF INCLUSION IN THE WORK.
39. THE DESIGNATED REPRESENTATIVE, THE ARCHITECT AND/OR THEIR CONSULTANTS DO NOT IMPLY, NOR DO THEY ASSUME RESPONSIBILITY FOR, THE METHOD OF DEMOLITION AND CONSTRUCTION. THE CONTRACTOR IS RESPONSIBLE FOR PROVIDING ALL NECESSARY TEMPORARY SHORING, BRACING, AND PROTECTION OF EXISTING AND NEW WORK, AS MAY BE REQUIRED FOR PROTECTING THE INTEGRITY OF THE STRUCTURE, AND FOR ENSURING THE SAFETY OF ITS OCCUPANTS.
40. REFER TO DECOR COMPANY DRAWINGS FOR FINISH PRODUCT SPECIFICATIONS. (SEE NOTE 24 FOR ADDITIONAL REQUIREMENTS). G.C. TO COORDINATE ORDERING OF PRODUCTS WITH DECOR VENDOR.
41. REFER TO DECOR COMPANY DRAWINGS FOR SEATING LAYOUT, ADDITIONAL FRONT COUNTER INFORMATION, CEILING HEIGHTS, AND FINISHES.
42. AT PRE-CON MEETING, GC TO VERIFY POWER AND DATA REQUIREMENTS FOR CREW ROOM.
43. DECORATIVE MATERIALS SHALL BE FLAME RETARDANT AND MEET THE CRITERIA OF NFPA 701.
44. DECORATIVE MATERIALS SHALL NOT CONCEAL EXITS. EXIT LIGHTS, ALARM STATIONS, HOSE CABINETS AND EXTINGUISHER LOCATIONS.
45. WHEN BUILDING TYPE IS A NON-COMBUSTIBLE CATEGORY, ALL PLYWOOD SHALL BE FIRE RETARDANT TREATED.
46. A. FRP OVER CEMENT BD BEHIND 3-COMP SINK TO HEIGHT OF BACK SPLASH.
    B. TILE WAINSCOTT TO 6' A.F.F. OVER CEMENT BD. OVER EXT GRADE PLYWOOD (NOTE 4) AT MOP SINKS.
47. PROVIDE CEMENT BOARD BACKER OR EQUIVALENT AT ALL TILE LOCATIONS.
48. PROVIDE VAPOR BARRIER BEHIND PLYWOOD AT WALLS AND BEHIND GYP. BD. AT CEILING.
49. SEE CEILING PLAN FOR HEIGHTS & LAYOUTS.
50. VWC ON EXTERIOR WALL ASSEMBLIES TO BE PERFORATED.
51. CONSTRUCTION ADMINISTRATION SERVICES NOTE:
    EBI CONSULTING HAS NOT BEEN ENGAGED TO PROVIDE CONSTRUCTION ADMINISTRATION SERVICES. JOSHUA CARRELL (ARCHITECT OF RECORD) IS NOT RESPONSIBLE FOR INTERPRETING THE INTENT OF THE CONSTRUCTION DOCUMENTS, INCLUDING MAKING MODIFICATIONS AS MAY BE NECESSARY DURING THE CONSTRUCTION PHASE; AND THAT THE ARCHITECT OF RECORD IS NO LONGER LIABLE FOR THE WORK WHERE CHANGES TO THE DOCUMENTS HAVE BEEN MADE.

PREPARED BY:
EBI Consulting
ENVIRO BUSINESS, INC.
21 B Street | Burlington, MA 01803
Tel: (781) 273-2500 | www.ebiconsulting.com

DRAWINGS AND SPECIFICATIONS ARE THE PROPERTY AND COPYRIGHT OF ENVIROBUSINESS, INC. THEY ARE FOR THE EXCLUSIVE USE BY THE TITLE CLIENT FOR THEIR USE AND FOR OCCUPYING THE PROJECT FOR WHICH THEY WERE PREPARED AND NOT FOR THE CONSTRUCTION OF ANY OTHER PROJECT. ANY DUPLICATION OR USE WITHOUT THE EXPRESS WRITTEN CONSENT OF ENVIROBUSINESS, INC. IS STRICTLY PROHIBITED.

SIGNED BY:
STATE OF MISSOURI
JOSHUA W. CARRELL
NUMBER A-2018040323
ARCHITECT
9/20/2021
DATE:

NAME: JOSHUA CARRELL
LICENSE NO: A-2018040323

© 2016 McDonald's USA, LLC

PREPARED FOR:
McDonald's USA, LLC

THESE DRAWINGS AND SPECIFICATIONS ARE THE CONFIDENTIAL AND PROPRIETARY PROPERTY OF MCDONALD'S USA, LLC AND SHALL NOT BE COPIED OR REPRODUCED WITHOUT WRITTEN AUTHORIZATION. THE CONTRACT DOCUMENTS WERE PREPARED FOR USE ON THIS SPECIFIC SITE IN CONJUNCTION WITH ITS ISSUE DATE AND ARE NOT SUITABLE FOR USE ON A DIFFERENT SITE OR AT A LATER TIME.
USE OF THESE DRAWINGS FOR REFERENCE OR EXAMPLE ON ANOTHER PROJECT REQUIRES THE SERVICES OF PROPERLY LICENSED ARCHITECTS AND ENGINEERS. REPRODUCTION OF THE CONTRACT DOCUMENTS FOR REUSE ON ANOTHER PROJECT IS NOT AUTHORIZED.

CONSULTANT:

SUBMITTAL

NO.	DESCRIPTION	DATE	BY
0	FOR PERMIT	9/8/21	JEC

DRAWN BY	REVIEWED BY	STD ISSUE DATE	DATE ISSUED	SITE ID NO.
JEC	JWC	2019	2020	30909

PROJECT TITLE: MCDONALD'S RESTAURANT KC MO-OAK & 96: 2019 MOD C
SHEET TITLE: GENERAL NOTES, SYMBOLS AND ABBREVIATIONS
SITE ADDRESS: 9551 N MCGEE STREET KANSAS CITY MO 64155
PROJECT NO. 4118000406
SHEET NO. G1.0

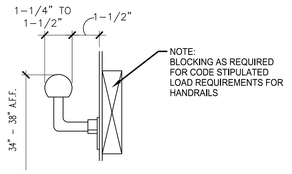

1 HANDRAIL SCALE: N.T.S.

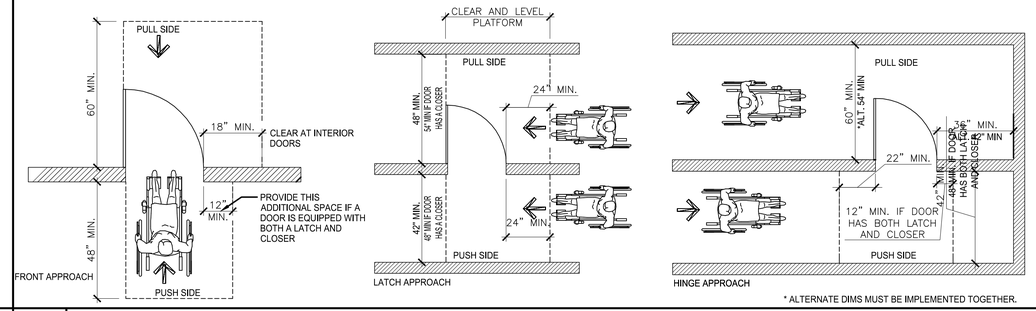

2 ACCESSIBLE DOOR APPROACHES SCALE: N.T.S.

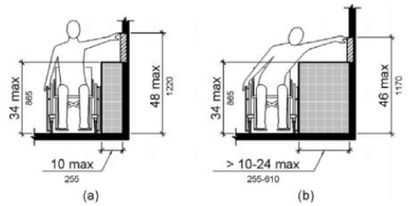

3 OBSTRUCTED HIGH SIDE REACH RANGES SCALE: N.T.S.

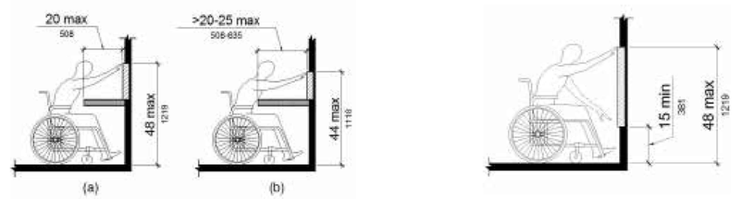

OBSTRUCTED HIGH FORWARD REACH

UNOBSTRUCTED HIGH FORWARD REACH

4 FORWARD REACH RANGES SCALE: N.T.S.

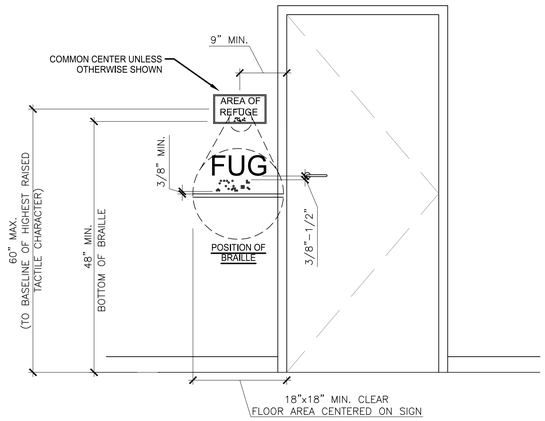

5 STANDARD DIMENSIONS SCALE: N.T.S.

REVIEWED FOR CODE COMPLIANCE
City Planning & Development
Development Services
City of Kansas City, Missouri
Jeffrey A. Lee
Building Official
Date: 01/18/2022 By: jnewport

CLOSING SPEED.
DOOR CLOSERS AND GATE CLOSERS SHALL BE ADJUSTED SO THAT FROM AN OPEN POSITION OF 90 DEGREES, THE TIME REQUIRED TO MOVE THE DOOR TO A POSITION OF 12 DEGREES FROM THE LATCH IS 5 SECONDS MINIMUM.
SPRING HINGES.
DOOR AND GATE SPRING HINGES SHALL BE ADJUSTED SO THAT FROM THE OPEN POSITION OF 70 DEGREES, THE DOOR OR GATE SHALL MOVE TO THE CLOSED POSITION IN 1.5 SECONDS MINIMUM.

MAX. DOOR CLOSER PRESSU
5.0 LBS. .....RIOR
8.5 LBS. .....EXTERIOR
NO. OF LBS DETERMINED BY AHJ.....FIRE

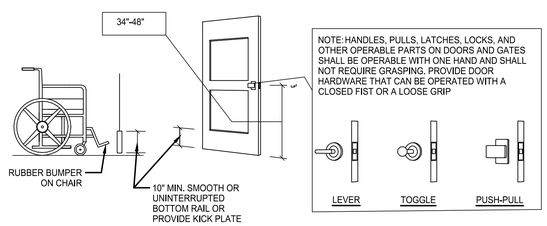

6 DOOR CONSTRUCTION AND DOOR HARDWARE SCALE: N.T.S.

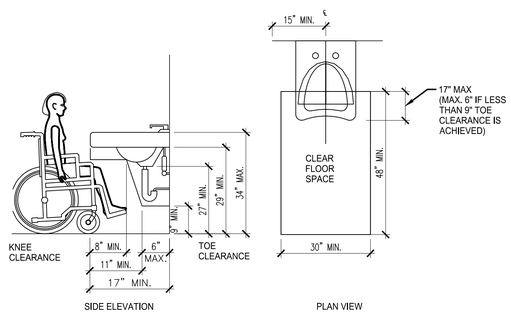

7 KNEE CLEARANCE SCALE: N.T.S.

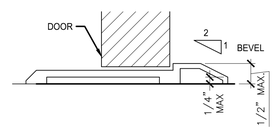

8 DOOR THRESHOLD SCALE: N.T.S.

NOTES:
(APPLICABLE TO DETAIL 5, THIS SHEET, AS WELL.)
1. INFORMATION CONTAINED ON SIGNS WILL BE PRESENTED USING RAISED ARABIC NUMERALS AND BRAILLE SYMBOLS.
2. SYMBOL SHALL CONTRAST WITH DOOR, EITHER LIGHT ON A DARK BACKGROUND OR DARK ON A LIGHT BACKGROUND.
3. ALL SIGNAGE SHALL CONFORM WITH THE FOLLOWING FEDERAL AND STATE LAWS: 2010 AMERICANS WITH DISABILITIES ACT ACCESSIBILITY GUIDELINES, ICC/ANSI A117.1–2009 GUIDELINES, AND CHAPTER 11 OF THE INTERNATIONAL BUILDING CODE PLUS LOCAL AMENDMENTS AND SUPPLEMENTS.

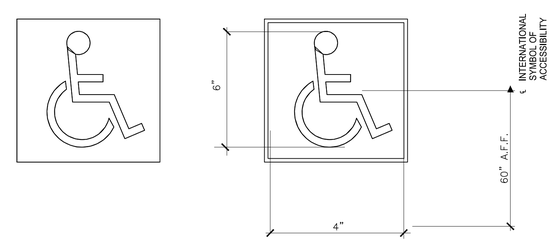

9 INTERNATIONAL SYMBOL OF ACCESSIBILITY SCALE: N.T.S.

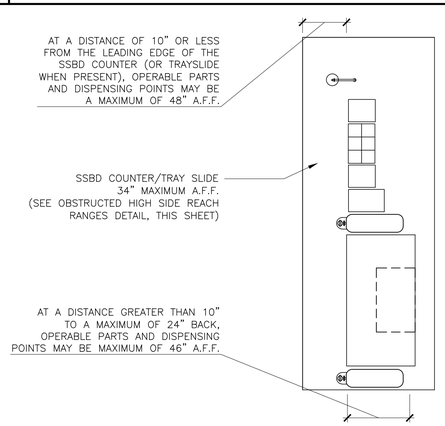

10 SELF SERVICE BEVERAGE BAR DETAIL

DIMENSIONS SHOWN ON THIS AND OTHER DRAWINGS DEPICT PROPER DIMENSIONS FOR COMPLIANCE WITH ICC/ANSI A117.1–2009 ACCESSIBLE AND USABLE BUILDINGS AND FACILITIES, AND 2010 ADA STANDARDS FOR ACCESSIBLE DESIGN GUIDELINES. CONTRACTOR SHALL FIELD VERIFY ALL EXISTING CONDITIONS TO DETERMINE IF COMPLIANCE WILL BE ACHIEVED BASED UPON THE SCOPE OF WORK SHOWN ON THE DRAWINGS. CONTRACTOR SHALL MAKE ADJUSTMENTS TO FIXTURE PLACEMENT AS REQUIRED TO ACHIEVE COMPLIANCE. THE COST FOR MAKING SUCH ADJUSTMENTS SHALL BE INCORPORATED INTO THE CONTRACTOR'S BASE BID. IN THE EVENT EXISTING CONDITIONS PRECLUDE COMPLIANCE OR IF SIGNIFICANT ADJUSTMENTS ARE REQUIRED, CONTRACTOR SHALL NOTIFY THE DESIGNATED REPRESENTATIVE. NO EXTRA WILL BE ENTERTAINED IF THE FOREGOING PROCEDURE IS NOT FOLLOWED.

11 HANDICAP ACCESSIBILITY NOTE

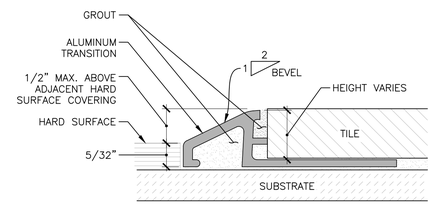

SCHLUTER SYSTEMS
SLOPED FLOOR TRANSITIONS
(SCHLUTER–RENO–U, OR APPROVED EQUAL)

NOTE:
DETAIL IS APPLICABLE WHERE OTHER HARD SURFACE COVERINGS ARE USED ON THE LOW SIDE OF THE TRANSITION STRIP.

12 FLOOR TRANSITION – HARD SURFACE SCALE: N.T.S.

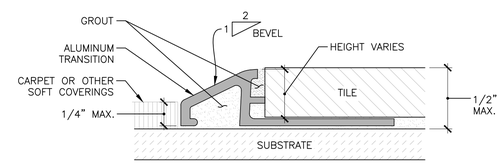

SCHLUTER SYSTEMS
SLOPED FLOOR TRANSITIONS
(SCHLUTER–RENO–U, OR APPROVED EQUAL)

NOTE:
DETAIL IS APPLICABLE WHERE CARPET OR OTHER "SOFT" COVERINGS ARE USED ON THE LOW SIDE OF THE TRANSITION STRIP.

13 FLOOR TRANSITION – SOFT SURFACE SCALE: N.T.S.

PREPARED BY:
EBI Consulting
ENVIRO BUSINESS, INC.
21 B Street | Burlington, MA 01803
Tel: (781) 273-2500 | www.ebiconsulting.com
DRAWINGS AND SPECIFICATIONS ARE THE PROPERTY AND COPYRIGHT OF ENVIROBUSINESS, INC. THIS ARE FOR THE EXCLUSIVE USE BY THE TITLE CLIENT FOR THEIR USE AND FOR COPYING AND DISTRIBUTION TO GOVERNMENT AGENCIES FOR REVIEW AND APPROVAL FOR THIS OR OTHER PROJECT. ANY DUPLICATION OR USE WITHOUT THE EXPRESS WRITTEN CONSENT OF ENVIROBUSINESS, INC. IS STRICTLY PROHIBITED.

SIGNED BY:
STATE OF MISSOURI
JOSHUA W. CARRELL
NUMBER A-2018040323
ARCHITECT
9/20/2021
DATE:
NAME: JOSHUA CARRELL
LICENSE NO: A–2018040323

©2016 McDonald's USA, LLC
PREPARED FOR:
McDonald's USA, LLC
THESE DRAWINGS AND SPECIFICATIONS ARE THE CONFIDENTIAL AND PROPRIETARY PROPERTY OF MCDONALD'S USA, LLC AND SHALL NOT BE COPIED OR REPRODUCED WITHOUT THE WRITTEN CONSENT OF MCDONALD'S USA, LLC. THEY ARE TRANSMITTED FOR USE ON THIS SPECIFIC PROJECT IN CONNECTION WITH ITS SOLE PLANT AND ARE NOT SUITABLE FOR USE ON A DIFFERENT SITE OR AT A LATER TIME. USE OF THESE DRAWINGS AND SPECIFICATIONS BY ANY PERSON OR ENTITY OTHER THAN THE PROJECT REQUIRES THE SERVICES OF PROPERLY LICENSED ARCHITECTS AND ENGINEERS. REUSE ON ANOTHER PROJECT IS NOT AUTHORIZED.

CONSULTANT:

SUBMITTAL

NO.	DESCRIPTION	DATE	BY
0	FOR PERMIT	9/8/21	JEC

DRAWN BY: JEC
REVIEWED BY: JWC
PR. TEMP. DATE: 2019
DATE ISSUED: 2020
JOB NO.: 30909

PROJECT TITLE: MCDONALD'S RESTAURANT KC MO–OAK & 96; 2019 MOD C
SHEET TITLE: HANDICAP ACCESSIBILITY STANDARDS
SITE ADDRESS: 9551 N MCGEE STREET KANSAS CITY MO 64155
PROJECT NO. 4118000406
SHEET NO. G2.0