SHEET INDEX

ARCHITECTURAL:

A000	COVER SHEET
A001	ACCESSIBILITY NOTES
A101	REMODEL FLOOR PLANS
A102	REMODEL PLANS
A103	REFLECTED CEILING PLAN
A200	INT & EXT ELEVS & SCHEDULES

MEP:

E101	LIGHTING PLANS
E201	POWER & SPECIAL SYSTEMS PLANS
E301	ELECTRICAL LIGHTING PLAN
E401	ELEC SCHEDULES
E501	ELEC SPECIFICATIONS
E502	ELEC SPECIFICATIONS
M101	MECH SYMBOLS
M201	MECH PLAN, DETAILS, SCHEDULES
M301	MECH SPECIFICATIONS
P101	WASTE & VENT PLANS & SCHEDULES
P201	WASTE RISER DIA & PLAN
P202	WATER RISER DIA & PLAN
P301	PLUMBING DETAILS & SCHEDULES

CREEKSIDE COMMONS BOBA TEA

8880 CLARK AVE.
PARKVILLE, MO 64152

PROJECT TEAM

BUILDING OWNER:
PAM HOELZEL

CONTACT:
816.753.8289
HOELZELPAM@AOL.COM

PROJECT OWNER:
ALAN STRIBLING

CONTACT:
913.915.2339
ALAN@REGENTPARTNERS.NET

ARCHITECTURAL TEAM:
HENRY BUTCH DOUGHERTY, ARCHITECT OF RECORD
MELISSA WRIGHT POWERS, PROJECT MANAGER
B + A ARCHITECTURE

CONTACT:
816.753.6100
BUTCH@BAARCHITECTURE.COM
MELISSA@BAARCHITECTURE.COM

MEP ENGINEER:
ZACH SMITH PE, PROJECT MANAGER
ENGINEERING BUSINESS SOLUTIONS, LLC
913.735.5654
ZACH@EBSOLUTIONSKC.COM

STANDARD ABBREVIATIONS

STANDARD ABBREVIATIONS:

AFF	ABOVE FINISHED FLOOR
BLDG	BUILDING
BM	BEAM
COL	COLUMN
CONC	CONCRETE
CONT	CONTINUOUS
DIA	DIAMETER
DWGS	DRAWINGS
ELEC	ELECTRICAL
ELEV	ELEVATION
EXT	EXTERIOR
FD	FLOOR DRAIN
FTG	FOOTING
FLR	FLOOR
FT	FOOT
FV	FIELD VERIFY
GA	GAUGE
GALV	GALVANIZED
GL	GLASS
GYP BD	GYPSUM BOARD
HORIZ	HORIZONTAL
HT	HEIGHT
HVAC	HEATING, VENTILATION, & AIR CONDITIONING
INSUL	INSULATION
LAV	LAVATORY
LF	LINEAR FEET
MECH	MECHANICAL
MRF	MANUFACTURER
MIN	MINIMUM
MTL	METAL
NFC	NOT FOR CONSTRUCTION
NTS	NOT TO SCALE
OC	ON CENTER
OH	OVERHEAD
OPG	OPENING
PERF	PERFORATED
PLF	PER LINEAR FOOT
PTD	PAINTED
REF	REFERENCE
REQ'D	REQUIRED
RO	ROUGH OPENING
SECT	SECTION
SF	SQUARE FEET
SIM	SIMILAR
SQ	SQUARE
STRUCT	STRUCTURAL
T&G	TONGUE & GROOVE
TYP	TYPICAL
UNO	UNLESS OTHERWISE NOTED
VERT	VERTICAL
WC	WATERCLOSET
WD	WOOD

SHEET INDEX

ARCHITECTURAL:

A000	COVER SHEET
A001	CODE ANALYSIS
A100	ARCHITECTURAL SITE PLAN
A101	REMODEL FLOOR PLANS
A102	REMODEL PLANS
A103	REFLECTED CEILING PLAN
A200	INT & EXT ELEVS & SCHEDULES

MEP:

MPE001	SYMBOLS & ABBREVIATIONS
MPE101	ROOF PLAN
M101	MECHANICAL PLANS
P101	WASTE & VENT PLANS
P201	WATER & GAS PLANS
P501	PLUMBING DETAILS & SCHEDULES
E101	LIGHTING PLANS
E201	POWER & SPECIAL SYSTEMS PLANS
E501	ELECTRICAL DETAILS & SCHEDULES

CODES & ORDINANCES

2018 INTERNATIONAL BUILDING CODE
2018 INTERNATIONAL EXISTING BUILDING CODE
2018 INTERNATIONAL FIRE CODE
2018 INTERNATIONAL MECHANICAL CODE
2018 UNIFORM PLUMBING CODE
2018 INTERNATIONAL FUEL GAS CODE
2017 NATIONAL ELECTRICAL CODE
CITY OF KANSAS CITY MO MUNICIPAL CODE
2009 ACCESSIBILITY & USABILITY CODE

PROJECT DATA

BUILDING DATA:

OCCUPANCY USE GROUP: ASSEMBLY A-2, FOOD & DRINK
ZONED: PLANNED UNIT DEVELOPMENT/ B-2
ZONING SETBACKS: NONE
ZONING MAX BUILDING HT: NONE
GROSS SQUARE FOOTAGE: 1,580 SF
TOTAL BUILDING HEIGHT: PRE-EXISTING CONDITION
CLIMATE ZONE: 4A
PARCEL ID: 20-4.0-19-000-000-008.004

DRAWING SYMBOLS KEY

SYMBOLS KEY:

WINDOW TAG	VERTICAL ELEVATION REFERENCE
DETAIL CALLOUT	DIMENSION LINE
INTERIOR ELEVATION TAG	CENTERLINE
DOOR TAG	NORTH ARROW
EXTERIOR ELEVATION	REVISION CLOUD
SECTION	VIEW INFO
	NOTE & LEADER

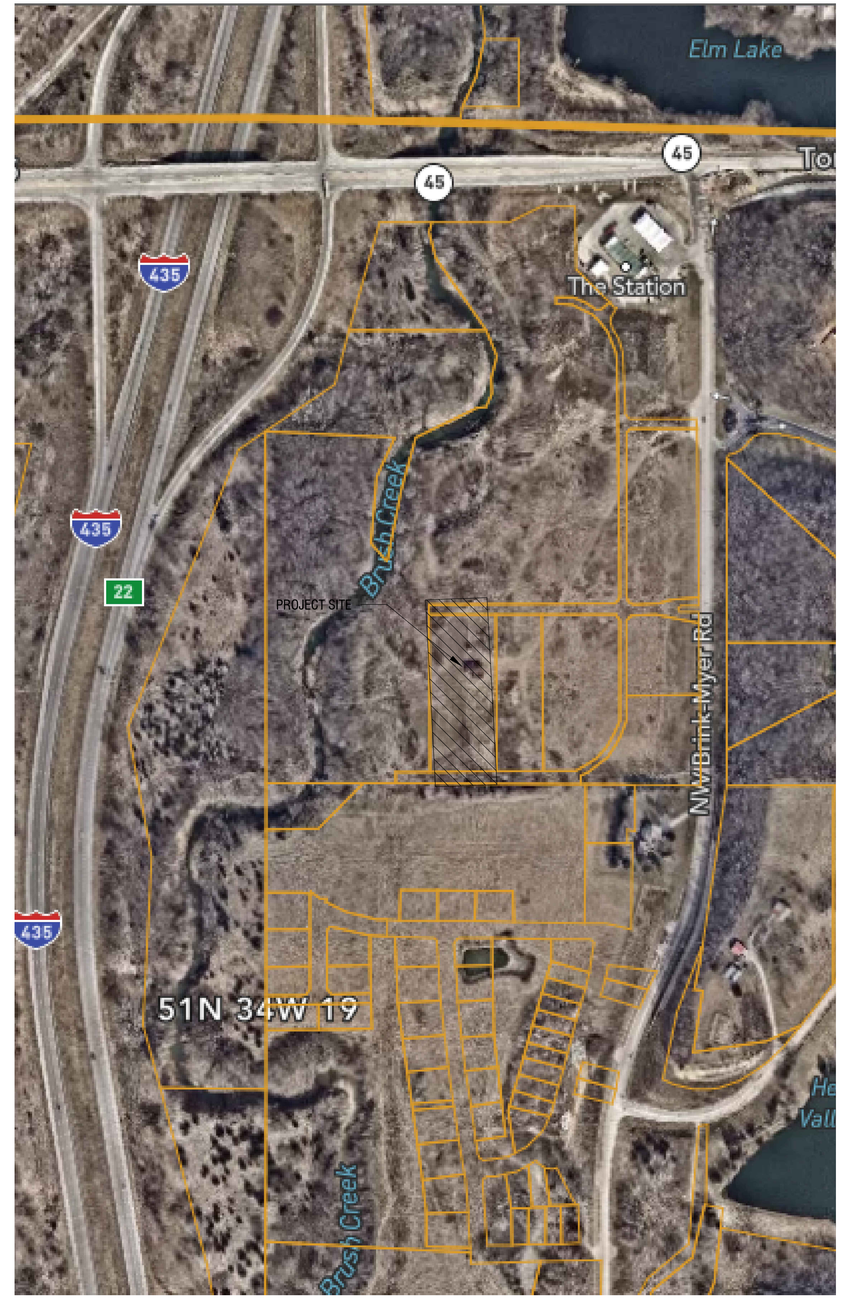

1 PROJECT SITE LOCATION KEY
SCALE: 3/32" = 1'-0"

N

ARCHITECTURE

ARCHITECT
B+A ARCHITECTURE, LLC
600 BROADWAY BLVD, SUITE 290
KANSAS CITY, MO 64105
PH: 816-753-6100

MEP ENGINEER
ENGINEERING BUILDING SOLUTIONS
PO BOX 11101
OVERLAND PARK, KS 66207
PH: 913-735-5654

PARKVILLE BOBA TEA SHOP
CREEKSIDE COMMONS
8880 CLARK AVE, PARKVILLE, MO 64152

SEAL

NOT FOR CONSTRUCTION

ISSUED: DECEMBER 15, 2022

NO.	REVISION	DATE

DESIGNED BY MDWP
DRAWN BY MDWP
CHECKED BY HBD

THIS DRAWING IS THE PROPERTY OF B+A ARCHITECTURE AND IS NOT TO BE REPRODUCED OR COPIED IN WHOLE OR IN PART. IT IS ONLY TO BE USED FOR THE PROJECT AND SITE SPECIFICALLY IDENTIFIED HEREIN AND IS NOT TO BE USED ON ANY OTHER PROJECT.

SCALES AS STATED HEREIN ARE VALID ON THE ORIGINAL DRAWING ONLY. CONTRACTOR SHALL CAREFULLY REVIEW ALL DIMENSIONS AND CONDITIONS SHOWN HEREIN AND AT ONCE REPORT TO THE ARCHITECT ANY ERROR INCONSISTENCY OR OMISSION DISCOVERED.

PROJECT COVER SHEET
A001

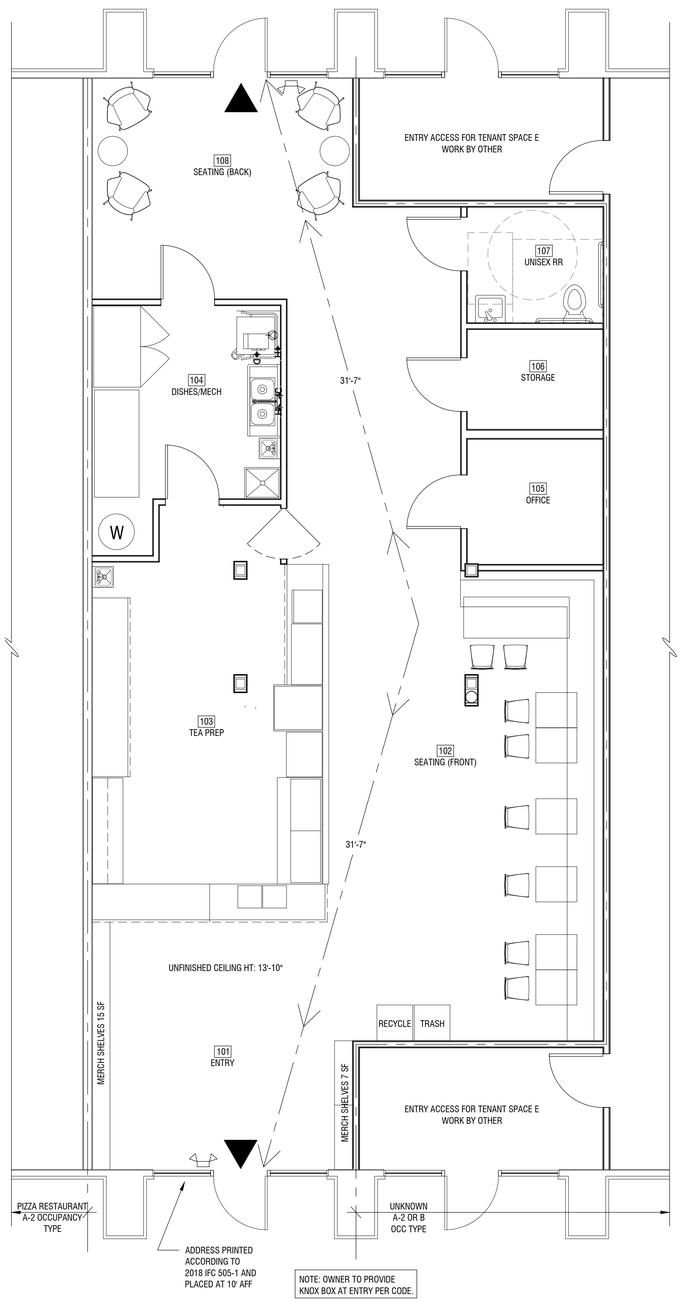

A1 CODE PLAN
SCALE: 1/4" = 1'-0"

CODE ANALYSIS

NO	FUNCTION	AREA	LOAD FACTOR	OCC LOAD
OCCUPANT LOAD PER IBC TABLE 1004.5				
1	BACK OF THE HOUSE	422 SF	200 GROSS SF	2.1
2	MERCANTILE	232 SF	60 GROSS SF	3.8
3	CONCENTRATED BUSINESS	550 SF	50 SF	11
4	OFFICE	61 SF	150 GROSS SF	.4
5	STORAGE-ANCILARY	48 SF	300 SF	.16
OCC LOAD TOTALS		1,313 SF		17.5 PERSONS
EXITING PER IBC 1005.3.2				
EXITING WIDTH REQ'D			.2"/PERSON	3.5" REQ'D
EXITING WIDTH PROVIDED				72" PROVIDED
PLUMBING FIXTURE COUNT PER IBC TABLE 2902.1				
PLUMBING FIXTURES REQ'D		1 WC	1 LAV	1 HAND SINK
PLUMBING FIXTURES PROVIDED		1 WC	1 LAV	2 HAND SINKS
EXITING PER IBC TABLE 1006.2.1				
MAX ALLOWABLE DISTANCE TRAVELED TO EXIT: 75'			MAX DISTANCE TRAVELED TO EXIT: 31-7'	

IEBC LEVEL 1 ALTERATION OF AN EXISTING BUILDING CODE NOTES:

PER IEBC 701.2: AN EXISTING BUILDING OR PORTION THEREOF SHALL NOT BE ALTERED SUCH THAT THE BUILDING BECOMES LESS SAFE THAN ITS EXISTING CONDITION.

PER IEBC 701.4: SMOKE ALARMS SHALL BE INSTALLED IN ACCORDANCE WITH SECTION 907.2.10 OF THE INTERNATIONAL BUILDING CODE REGARDLESS OF THE VALUATION OF THE ALTERATION.

PER IEBC 703.1: ALTERATIONS SHALL BE DONE IN A MANNER THAT MAINTAINS THE LEVEL OF FIRE PROTECTION PROVIDED.

PER IEBC 704.1: ALTERATIONS SHALL BE DONE IN A MANNER THAT MAINTAINS THE LEVEL OF PROTECTION PROVIDED FOR THE MEANS OF EGRESS.

A3 CODE ANALYSIS
SCALE: 1/4" = 1'-0"

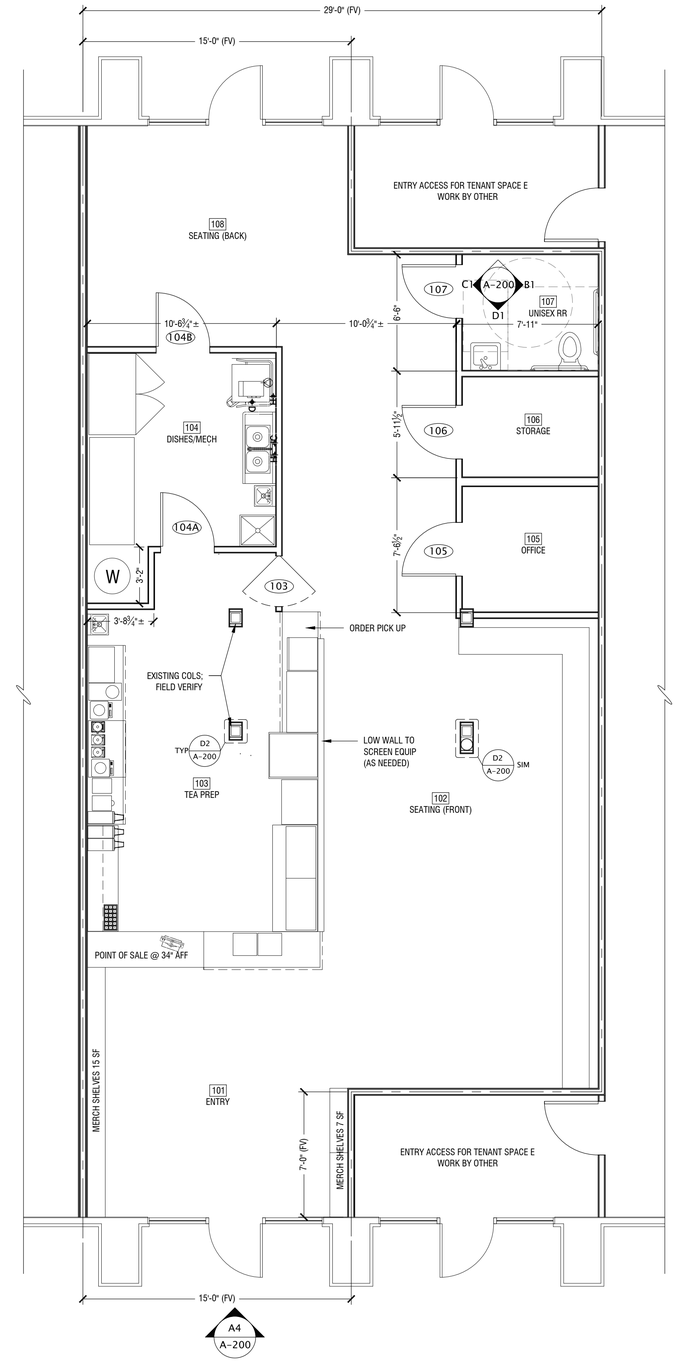

A4 TENANT FINISH REMODEL PLAN
SCALE: 1/4" = 1'-0"

ARCHITECT
B+A ARCHITECTURE, LLC
600 BROADWAY BLVD, SUITE 290
KANSAS CITY, MO 64105
PH: 816-753-6100

MEP ENGINEER
ENGINEERING BUILDING SOLUTIONS
PO BOX 11101
OVERLAND PARK, KS 66207
PH: 913-735-5654

PARKVILLE BOBA TEA SHOP
CREEKSIDE COMMONS
8880 CLARK AVE, PARKVILLE, MO 64152

SEAL

NOT FOR CONSTRUCTION

ISSUED: DECEMBER 15, 2022

NO.	REVISION	DATE

DESIGNED BY MDWP
DRAWN BY MDWP
CHECKED BY HBD

THIS DRAWING IS THE PROPERTY OF B+A ARCHITECTURE AND IS NOT TO BE REPRODUCED OR COPIED IN WHOLE OR IN PART. IT IS ONLY TO BE USED FOR THE PROJECT AND SITE SPECIFICALLY IDENTIFIED HEREIN AND IS NOT TO BE USED ON ANY OTHER PROJECT.

SCALED AS STATED HEREIN ARE VALID ON THE ORIGINAL DRAWING ONLY. CONTRACTOR SHALL CAREFULLY REVIEW ALL DIMENSIONS AND CONDITIONS SHOWN HEREIN AND AT ONCE REPORT TO THE ARCHITECT ANY ERROR INCONSISTENCY OR OMISSION DISCOVERED.

FLOOR PLANS
A101

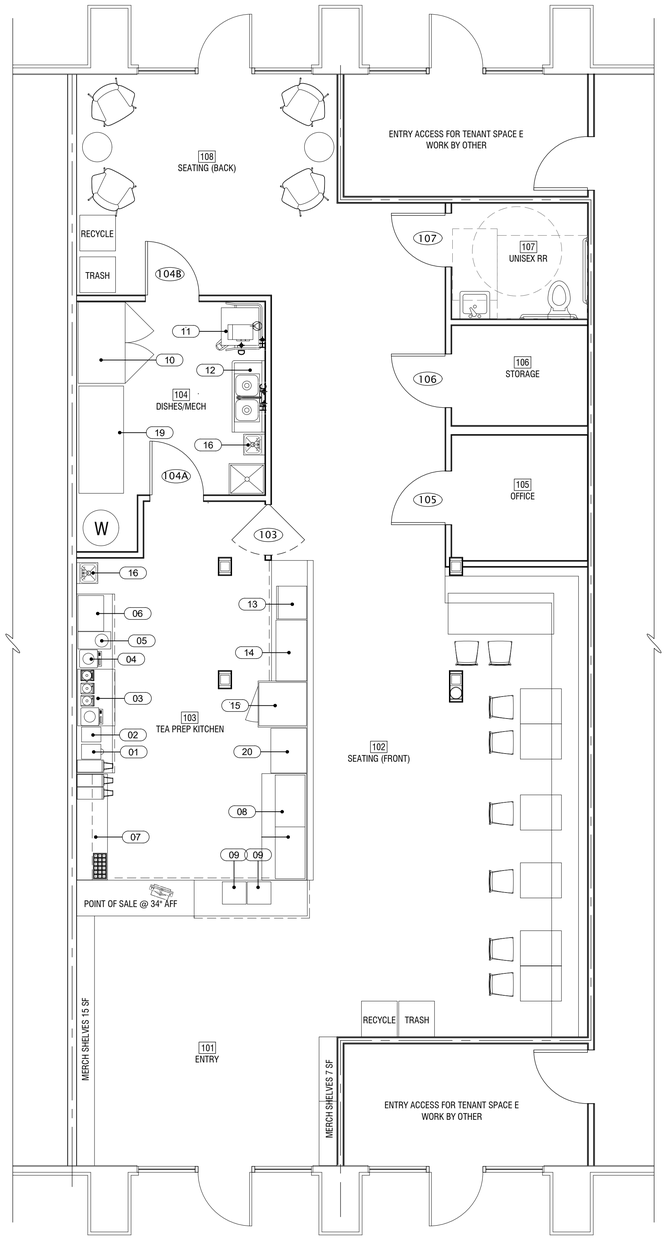

A1 KITCH EQUIP LAYOUT PLAN

SCALE: 1/4" = 1'-0"

N

EQUIPMENT SCHEDULE

ITEM NO	EQUIPMENT CATEGORY
1	BUBLE TEA SEALING MACHINE
2	BOBA TEA SHAKER
3	BUBBLE TEA BLENDER
4	BUBBLE TEA FRUCTOSE DISPENSER
5	BUNN TEA BREWER
6	AUTOMATIC TAPIOCA PEARL BOBA COOKER
7	BUBBLE TEA BAR COUNTER
8	ARCTIC AIR REFRIGERATED SANDWICH PREP TABLE
9	KOOLMORE BAKERY DISPLAY CASE
10	KITMA SIDE BY SIDE COOLER
11	CMA DISHMACHINES LOW TEMP DISHWASHER
12	KOOLMORE 2 COMP SINK
13	SOLWAVE MICROWAVE
14	VOLLRATH CONVEYOR OVEN
15	MOFFAT DIGITAL CONVECTION OVEN WITH STEAM INJECTION
16	HANDWASH SINK
17	FLOOR TROUGH
18	POINT OF SALE
19	STAINLESS 72X30 SALAD PREP TABLE
20	STAINLESS 30X24 SALAD PREP TABLE

NOTE: WET AREAS BEHIND EQUIPMENT SHALL BE COVERED IN FRP WHERE NOT VISIBLE TO THE PUBLIC VIEW & STAINLESS STEEL WHERE VISIBLE.

C3 EQUIPMENT SCHEDULE

SCALE: NTS

HORIZONTAL PARTITION TYPES:

13 3/4" — UL DES L511 2 HR WOOD FRAME FLR/CLG ASSEMBLY

NEW PARTITION TYPES KEY (VERTICAL):

P1 — 4 1/2" — TYP INT WALL: 2X4 STUD WALL, (1) LAYER 1/2" GYP BD EA SIDE (GLASS BATTS OPTIONAL)

P2 — 6 1/2" — TYP INT PLUMBING WALL: 2X6 STUD WALL, (1) LAYER 1/2" GYP BD EA SIDE (GLASS BATTS OPTIONAL)

P4 — 3 5/8" — UL DES U415 SYSTEM B OR U438- 2 HR FIRE RATED SEPARATION: 2 LAYERS 1/2" USG FIRECODE C PANELS, FACE LAYER JOINTS FIN. 2 1/2" USG C-H STUDS 24 GAUGE 24" OC (MIN) 1" USG SHEETROCK BRAND GYPSUM LINER PANELS

P5 — UL DES U415-1 HR FIRE RATED VERTICAL: INT SIDE: 1/2" FIRECODE C CORE PANELS EA SIDE OF 2 1/2" 25 GAUGE STUDS AT 24" OC (MIN), GYP BD JOINTS FINISHED

P6 — 6 1/2" — UL DES U301-2 HR FIRE RATED VERTICAL: 2 LAYERS 5/8" TYPE-X GYPSUM BD EA SIDE OF 2X4 WOOD STUDS (MIN) @16" OC, JOINTS FINISHED, R-19 GLASS BATTS

NOTES:

COMMERCIAL KITCHEN WET AREAS SHALL HAVE FRP OR STAINLESS PANELS.

FIREPROOFED COLUMNS SHALL BE WRAPPED & SHALL HAVE A WASHABLE SURFACE. REF DETAIL D2/A200

A3 PARTITIONS TYPES

SCALE: NTS

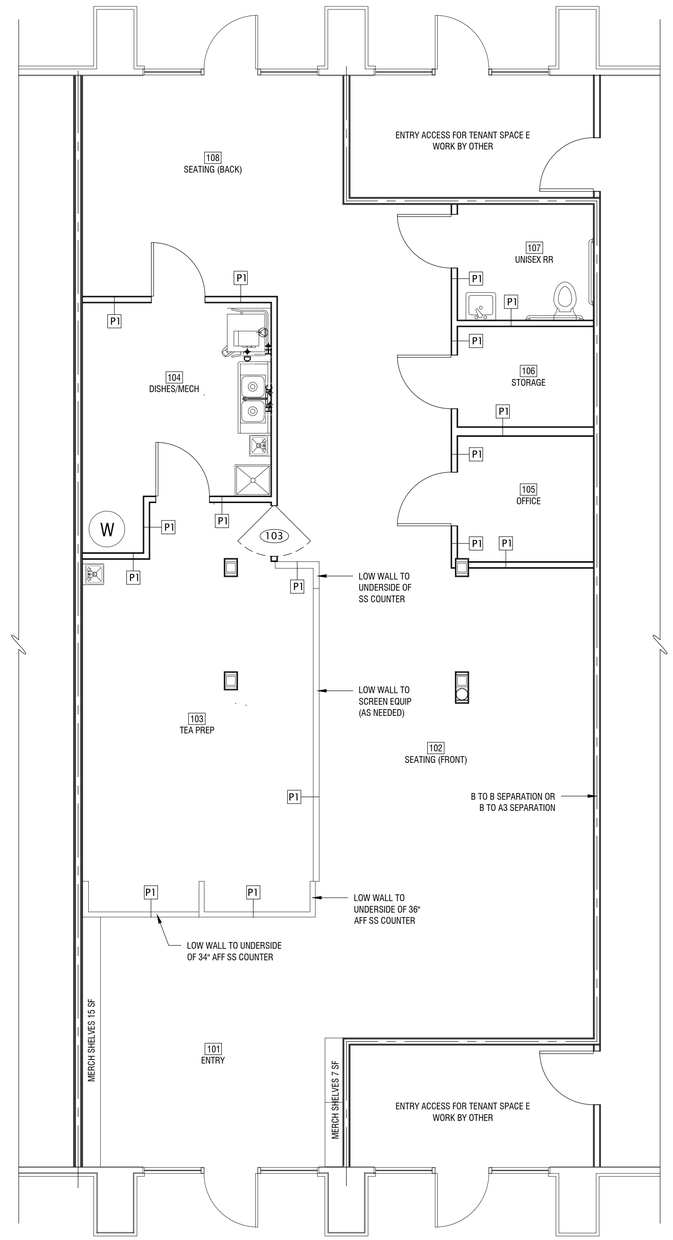

A4 PARTITIONS KEY PLAN

SCALE: 1/4" = 1'-0"

N

ARCHITECTURE

ARCHITECT
B+A ARCHITECTURE, LLC
600 BROADWAY BLVD, SUITE 290
KANSAS CITY, MO 64105
PH: 816-753-6100

MEP ENGINEER
ENGINEERING BUILDING SOLUTIONS
PO BOX 11101
OVERLAND PARK, KS 66207
PH: 913-735-5654

PARKVILLE BOBA TEA SHOP

CREEKSIDE COMMONS

8880 CLARK AVE, PARKVILLE, MO 64152

SEAL

NOT FOR CONSTRUCTION

ISSUED: DECEMBER 15, 2022

NO.	REVISION	DATE

DESIGNED BY MDWP
DRAWN BY MDWP
CHECKED BY HBD

THIS DRAWING IS THE PROPERTY OF B+A ARCHITECTURE AND IS NOT TO BE REPRODUCED OR COPIED IN WHOLE OR IN PART. IT IS ONLY TO BE USED FOR THE PROJECT AND SITE SPECIFICALLY IDENTIFIED HEREIN AND IS NOT TO BE USED ON ANY OTHER PROJECT.

SCALES AS STATED HEREIN ARE VALID ON THE ORIGINAL DRAWING ONLY. CONTRACTOR SHALL CAREFULLY REVIEW ALL DIMENSIONS AND CONDITIONS SHOWN HEREIN AND AT ONCE REPORT TO THE ARCHITECT ANY ERROR INCONSISTENCY OR OMISSION DISCOVERED.

FLOOR PLANS

A102

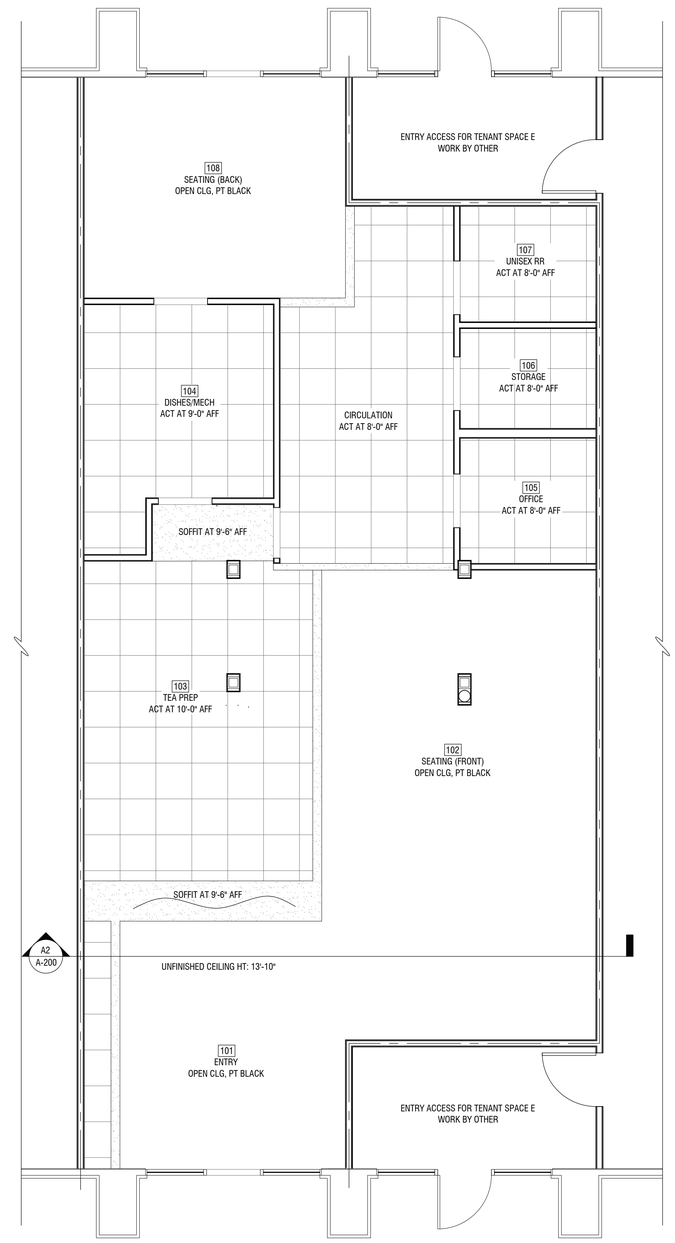

A4 REFLECTED CEILING PLAN
SCALE: 1/4" = 1'-0"

N

CLG TYPE KEY:

GYP BD

ACOUSTICAL CLG TILE

ARCHITECT
B+A ARCHITECTURE, LLC
600 BROADWAY BLVD, SUITE 290
KANSAS CITY, MO 64105
PH: 816-753-6100

MEP ENGINEER
ENGINEERING BUILDING SOLUTIONS
PO BOX 11101
OVERLAND PARK, KS 66207
PH: 913-735-5654

PARKVILLE BOBA TEA SHOP

CREEKSIDE COMMONS
8880 CLARK AVE, PARKVILLE, MO 64152

SEAL

NOT FOR CONSTRUCTION

ISSUED: DECEMBER 15, 2022

NO.	REVISION	DATE

DESIGNED BY MDWP
DRAWN BY MDWP
CHECKED BY HBD

THIS DRAWING IS THE PROPERTY OF B+A ARCHITECTURE AND IS NOT TO BE REPRODUCED OR COPIED IN WHOLE OR IN PART. IT IS ONLY TO BE USED FOR THE PROJECT AND SITE SPECIFICALLY IDENTIFIED HEREIN AND IS NOT TO BE USED ON ANY OTHER PROJECT.

SCALES AS STATED HEREIN ARE VALID ON THE ORIGINAL DRAWING ONLY. CONTRACTOR SHALL CAREFULLY REVIEW ALL DIMENSIONS AND CONDITIONS SHOWN HEREIN AND AT ONCE REPORT TO THE ARCHITECT ANY ERROR INCONSISTENCY OR OMISSION DISCOVERED.

FLOOR PLANS

A102

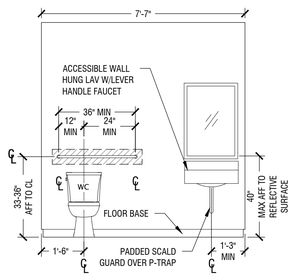

D1 UNISEX BATHROOM INT ELEV
SCALE: 3/8" = 1'-0"

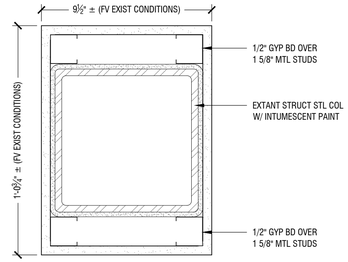

D2 COLUMN SECTION DETAIL
SCALE: 3" = 1'-0"

FINISH SCHEDULE									
RM #	RM NAME	GYP BD FINISH	WALL COLOR	PAINT TYPE	TRIM COLOR	BASE TRIM TYPE	CEILING HEIGHT	CEILING FINISH	FLOORING
101	ENTRY/MERCANTILE	LEVEL 5	BY OWNER	SATIN LATEX, WHITE	WHITE	1X4" WD BASE	13'-10"± (FV)	EXISTING TO REMAIN	HONED CONCRETE
102	OPEN SEATING (FRONT)	LEVEL 5	BY OWNER	SATIN LATEX, WHITE	WHITE	1X4" WD BASE	13'-10"± (FV)	EXISTING TO REMAIN	HONED CONCRETE
103	TEA PREP KITCHEN	LEVEL 5	BY OWNER	SATIN LATEX, WHITE	GRAY	4" VINYL	10'-0"± (FV)	WASHABLE ACT	HONED CONCRETE
104	DISHES & MECH	LEVEL 3 W/ FRP	BY OWNER	SATIN LATEX, WHITE	GRAY	4" VINYL	9'-0"± (FV)	WASHABLE ACT	HONED CONCRETE
105	OFFICE	LEVEL 5	BY OWNER	SATIN LATEX, WHITE	GRAY	4" VINYL	8'-0"± (FV)	ACT	LVT
106	DRY STORAGE	LEVEL 4	BY OWNER	SATIN LATEX, WHITE	GRAY	4" VINYL	8'-0"± (FV)	ACT	EXIST CONCRETE
107	RESTROOM	LEVEL 5	BY OWNER	SATIN LATEX, WHITE	GRAY	4" VINYL	8'-0"± (FV)	ACT	LVT
108	OPEN SEATING (REAR)	LEVEL 5	BY OWNER	SATIN LATEX, WHITE	WHITE	1X4" WD BASE	13'-10"± (FV)	EXISTING TO REMAIN	HONED CONCRETE

DOOR SCHEDULE									HARDWARE SCHEDULE							
NO	DOOR TYPE	DOOR DIMS	LOCATION	MATERIAL	NFPA RATING	FINISH	DR ELEV	REMARKS	HINGES	SILENCERS	CLOSER	SECURITY LOCKSET	PRIVACY LOCK	PASSAGE SET	THRESHOLD	STOP	PANIC BAR
003	INTERIOR	3'-0"7'-0"	DRINK STATIONS	WOOD	-	PAINT, SATIN WHITE	B	INSWING/OUTSWING	●					●			
104A	INTERIOR	3'-0"7'-0"	DISHES/MECH	SOLID CORE WOOD	-	PAINT, SATIN WHITE	B	-	●			●					
104B	INTERIOR	3'-0"7'-0"	DISHES/MECH	SOLID CORE WOOD	-	PAINT, SATIN WHITE	B	-	●			●					
105	INTERIOR	3'-0"7'-0"	OFFICE	SOLID CORE WOOD	-	PAINT, SATIN WHITE	A	-	●			●					
106	INTERIOR	3'-0"7'-0"	CLOSET	SOLID CORE WOOD	-	PAINT, SATIN WHITE	A	-	●			●					
107	INTERIOR	3'-0"7'-0"	RESTROOM	WOOD	-	PAINT, SATIN WHITE	A	-	●				●				

C3 SCHEDULES
SCALE: NTS

FINISH NOTES:

ALL PAINT SHALL BE WASHABLE. NO FLAT PAINTS.

FLOORS CAN BE POLISHED/HONED & SEALED CONCRETE OR TEXTURED EPOXY RESIN. PER PROJECT OWNER APPROVAL

ALL PAINT & COLOR ALTERNATIVE SELECTIONS TO BE APPROVED BY PROJECT OWNER.

COMMERCIAL KITCHEN COUNTERS TO BE STAINLESS STEEL. ANY ALTERNATIVE COUNTERTOP MATERIAL & FINISHES APPROVED BY PROJECT OWNER

POINT OF SALE EQUIPMENT BY PROJECT OWNER.

ALL NEW DOOR HANDLES TO BE LEVER ACTION TYPE, FINISH APPROVED BY PROJECT OWNER.

ALL PUBLIC USE SINK FAUCETS TO BE ACCESSIBILITY COMPLIANT, LEVER-ACTION TYPE, FINISH: BRUSHED OR SATIN NICKEL OR OTHERWISE APPROVED BY PROJECT OWNER.

ALL NEW HARDWARE: FINISH: BRUSHED OR SATIN NICKEL TO BE APPROVED BY OWNER.

FLOORING AS SELECTED & APPROVED BY PROJECT OWNER

HARDWARE NOTES:

DOOR HANDLES, PULLS, LATCHES, LOCKS AND OTHER OPERATING DEVICES ON DOORS REQ'D TO BE ACCESSIBLE BY CHPT 11/IBC SHALL NOT REQUIRE TIGHT GRASPING, PINCHING, OR TWISTING OF THE WRIST TO OPERATE AND SHALL BE LEVER-ACTION TYPE.

DOOR HANDLES, PULLS, LATCHES, AND OTHER OPERATING DEVICES SHALL BE INSTALLED 34" MIN AND 48" MAX ABOVE THE FINISHED FLOOR. LOCKS USED ONLY FOR SECURITY PURPOSES AND NOT USED FOR NORMAL OPERATION ARE PERMITTED AT ANY HEIGHT.

NO THRESHOLD SHALL BE MORE TALLER THAN 3/4" PER IEBC 305.8.14

C5 NOTES
SCALE: NTS

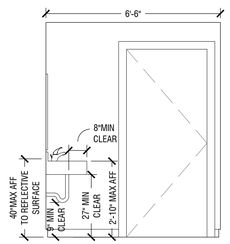

C1 UNISEX BATHROOM INT ELEV
SCALE: 3/8" = 1'-0"

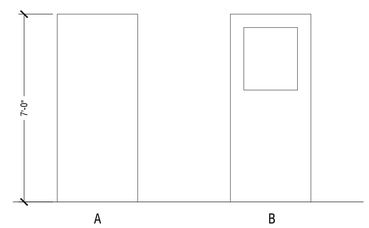

B3 DOOR ELEVATIONS
SCALE: 3/8" = 1'-0"

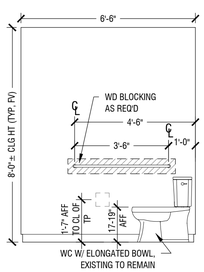

B1 UNISEX BATHROOM INT ELEV
SCALE: 3/8" = 1'-0"

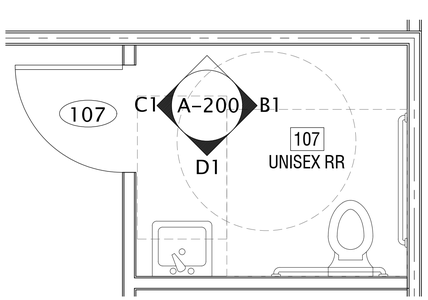

A1 KITCH EQUIP LAYOUT PLAN
SCALE: 1/2" = 1'-0"

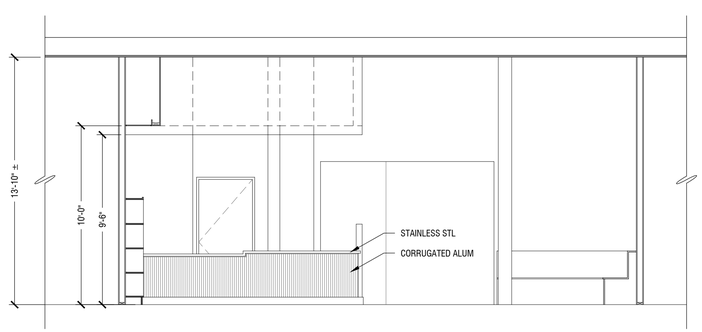

A2 BUILDING SECTION
SCALE: 1/4" = 1'-0"

A4 BUILDING FACADE ELEVATION
SCALE: 1/4" = 1'-0"

ARCHITECT
B+A ARCHITECTURE, LLC
600 BROADWAY BLVD, SUITE 290
KANSAS CITY, MO 64105
PH: 816-753-6100

MEP ENGINEER
ENGINEERING BUILDING SOLUTIONS
PO BOX 11101
OVERLAND PARK, KS 66207
PH: 913-735-5654

PARKVILLE BOBA TEA SHOP
CREEKSIDE COMMONS
8880 CLARK AVE, PARKVILLE, MO 64152

SEAL

NOT FOR CONSTRUCTION

ISSUED: DECEMBER 15, 2022

NO.	REVISION	DATE

DESIGNED BY MDWP
DRAWN BY MDWP
CHECKED BY HBD

THIS DRAWING IS THE PROPERTY OF B+A ARCHITECTURE AND IS NOT TO BE REPRODUCED OR COPIED IN WHOLE OR IN PART. IT IS ONLY TO BE USED FOR THE PROJECT AND SITE SPECIFICALLY IDENTIFIED HEREIN AND IS NOT TO BE USED ON ANY OTHER PROJECT.

SCALES AS STATED HEREIN ARE VALID ON THE ORIGINAL DRAWING ONLY. CONTRACTOR SHALL CAREFULLY REVIEW ALL DIMENSIONS AND CONDITIONS SHOWN HEREIN AND AT ONCE REPORT TO THE ARCHITECT ANY ERROR INCONSISTENCY OR OMISSION DISCOVERED.

SECTIONS, ELEVS, & SCHEDULES

A200

ELECTRICAL ABBREVIATIONS

AC	ALTERNATING CURRENT
AHU	AIR HANDLING UNIT
A. OR AMPS.	AMPERES
AFC	ABOVE FINISH COUNTER
AFCI	ARC FAULT CIRCUIT INTERRUPTER
AFF	ABOVE FINISHED FLOOR
AIC	AMPERES INTERRUPTING CAPACITY
ATS	AUTOMATIC TRANSFER SWITCH
BTC	BRANCH TO CONNECTION POINT AND CONNECT EQUIPMENT
C	CONDUIT ("E.C." IS EMPTY CONDUIT)
CF	CEILING FAN
CM	COFFEE MAKER
CT	COOKTOP
D	DEDICATED CIRCUIT
DCO	DUPLEX CONVIENCE OUTLET
DP	DISPOSAL
DW	DISHWASHER
DY	DRYER
EMT	ELETTRICAL METALLIC TUBING
EF	EXHAUST FAN
EWC	ELECTRIC WATER COOLER (WATER-COOLED DRINKING FOUNTAIN)
EX	EXISTING
FCU	FAN COIL UNIT
GFI/GFCI	GROUND FAULT CIRCUIT INTERRUPTER
GFIP	GROUND FAULT INTERRUPTER PROTECTED
GRD	GROUND
H	HORIZONTAL MOUNT (RECEPTACLE)
HD	VENTILATION HOOD
HP	HORSEPOWER
HT	HEAT TRACE POWER (PROVIDE W/ 20A/1P GFI BREAKER)
HVAC	HEATING, VENTILATING, & AIR CONDITIONING
HZ	HERTZ
IG	ISOLATED GROUND (DUPLEX RECEPTS. - NEMA 5-20RIG)
KCM	THOUSAND CIRCULAR MILLS
KVA	KILOVOLT-AMPERES (1000 VOLT-AMPERES)
KW	KILOWATTS (1000 WATTS)
MLO	MAIN LUGS ONLY
MCB	MAIN CIRCUIT BREAKER
MW	MICROWAVE (COORD MTG HT W/ ARCHITECT)
NIC	NOT IN CONTRACT
NEC	NATIONAL ELECTRICAL CODE
NF	NOT FUSED
OFCI	OWNER FURNISHED CONTRACTOR INSTALLED
PNL	PANEL
PH OR Ø	PHASE
P	POLE
PVC	POLYVINYL CHLORIDE
RF	REFRIGERATOR
RG	RANGE
SPD	SURGE PROTECTIVE DEVICE
T	TAMPERPROOF RECEPTACLE
TTB	TELEPHONE TERMINAL BOARD
TV	TELEVISION RECEPTACLE
UC	UNDERCOUNTER REFRIGERATOR (OR ICE MACHINE)
UL	UNDERWRITERS LABORATORIES
U.N.O.	UNLESS NOTED OTHERWISE
V	VOLTS
VA	VOLT-AMPERES
VD	VENDING MACHINE (24"AFF)
VFD	VARIABLE FREQUENCY DRIVE
W	WATTS
WA	WASHER
WD	WARMING DRAWER
WO	WALL OVEN
WP	WEATHERPROOF
WP/WR	WEATHERPROOF/WEATHER RESISTANT
W/UNIT	DISCONNECT IS SUPPLIED WITH THE UNIT

GENERAL ELECTRICAL NOTES

1. COMPLETE INSTALLATION SHALL BE IN ACCORDANCE WITH THE NATIONAL ELECTRICAL CODE, REQUIREMENTS OF THE AHJ AND ALL LOCAL & STATE CODES.
2. DO NOT SCALE FROM THESE DRAWINGS.
3. REFER TO ARCHITECTURAL DRAWINGS AND REFLECTED CEILING PLANS FOR EXACT LOCATIONS OF ALL LIGHTING FIXTURES AND ELECTRICAL DEVICES.
4. ALL EMPTY CONDUITS SHALL BE PROVIDED WITH PULL STRINGS AND BUSHINGS.
5. ALL JUNCTION BOXES SHALL HAVE A COVER.
6. COORDINATE EACH LIGHT FIXTURE INSTALLATION(S) W/ ACTUAL CEILING TO BE FURNISHED.
7. ALL BRANCH CIRCUITS WITHOUT A CONDUCTOR & CONDUIT INDICATED SHALL BE ROUTED TO A 20A-1P BREAKER W/ 2#12,1#12EG,3/4"C.
8. ALL BRANCH CIRCUIT CONDUCTORS SHALL NOT BE SMALLER THAN #12 AWG AND ALL CONDUIT SHALL NOT BE SMALLER THAN 3/4"C. UNLESS SPECIFICALLY NOTED OTHERWISE.
9. ALL CIRCUITS (LIGHTING AND POWER) SHALL BE PROVIDED WITH DEDICATED NEUTRALS UNLESS NOTED OTHERWISE. WHERE NEUTRALS ARE INDICATED TO BE SHARED, MULTIWIRE BRANCH CIRCUITS SHALL BE PROVIDED WITH 2P OR 3P BREAKERS AS REQUIRED PER NEC210.4.
10. ALL CIRCUITS (LIGHTING AND POWER) SHALL BE PROVIDED WITH AN INSULATED EQUIPMENT GROUND CONDUCTOR SIZED IN ACCORDANCE WITH THE NEC. THE RACEWAY SHALL NOT BE USED AN EQUIPMENT GROUND.
11. ALL FIXTURES SHALL BE SUPPORTED FROM EACH CORNER (INDEPENDENT OF THE SUSPENDED CEILING) WITH 12 GAUGE WIRE CONNECTED TO STRUCTURAL SYSTEM OF BUILDING. THE INSTALLATION SHALL MEET OR EXCEED THE SEISMIC REQUIREMENTS OF LOCAL AND NATIONAL CODES.
12. ELECTRICAL DEVICE MOUNTING HEIGHTS, UNO:

PANELBOARDS	78" AFF TO TOP OF PANEL
SWITCHES	48" AFF TO CENTER OF SWITCH
RECEPTACLES	18" AFF TO CENTER OF RECEPTACLE
TELE/DATA OUTLETS	18" AFF TO CENTER OF RECEPTACLE

13. ELECTRICAL EQUIPMENT (PANELBOARDS, TRANSFORMERS, DISTRIBUTION EQUIPMENT, ETC.) IS SHOWN TO SCALE ON THE FLOOR PLANS.
14. THE ELECTRICAL CONTRACTOR IS RESPONSIBLE FOR PROVIDING EQUIPMENT THAT WILL FIT WITHIN THE SPACES SHOWN ON THE PLANS AND COMPLYING WITH ALL CODE REQUIRED CLEARANCES.
15. ELECTRICAL CONTRACTOR TO LABEL ALL DEVICES (RECEPTACLES, SWITCHES, PANELBOARDS, DISCONNECTS, ETC.) WITH CIRCUIT NUMBER AND PANELBOARD DESIGNATION. RECEPTACLES, SWITCHES, AND SIMILAR DEVICES TO HAVE PRE-PRINTED, SELF ADHESIVE LABEL.
16. PANELBOARDS, DISCONNECT SWITCHES, AND SIMILAR DEVICES TO HAVE ENGRAVED, SELF-ADHESIVE, LAMINATED ACRYLIC LABEL (BLACK W/ WHITE LETTERING).
17. PROVIDE TYPE-WRITTEN PANELBOARD SCHEDULES FOR ALL ELECTRICAL PANELBOARDS.

ELECTRICAL SYMBOLS

LIGHTING FIXTURES/DEVICES

SYMBOL	DESCRIPTION	MOUNTING
A	DOWNLIGHT (LETTER INDICATES FIXTURE TYPE) REFER TO LIGHT FIXTURE SCHEDULE	CEILING
A	DIRECTIONAL DOWNLIGHT (LETTER INDICATES FIXTURE TYPE) REFER TO LIGHT FIXTURE SCHEDULE	CEILING
A	WALL MOUNTED LIGHT FIXTURE (LETTER INDICATES FIXTURE TYPE) REFER TO LIGHT FIXTURE SCHEDULE	WALL
A	LINEAR LIGHT FIXTURE (LETTER INDICATES FIXTURE TYPE) REFER TO LIGHT FIXTURE SCHEDULE	CEILING OR SUSPENDED
A	2X4 LIGHT FIXTURE (LETTER INDICATES FIXTURE TYPE) REFER TO LIGHT FIXTURE SCHEDULE	CEILING
A	2X2 LIGHT FIXTURE (LETTER INDICATES FIXTURE TYPE) REFER TO LIGHT FIXTURE SCHEDULE	CEILING
	HATCHING ON FIXTURE INDICATES FIXTURE TO HAVE EMERGENCY BACK-UP	
X3	TWO HEAD EMERGENCY LIGHT FIXTURE (LETTER INDICATES FIXTURE TYPE) REFER TO LIGHT FIXTURE SCHEDULE	WALL OR CEILING
X1 X1	EMERGENCY EXIT SIGN. PROVIDE ARROW(S) AS INDICATED. SHADING INDICATES FACE (LETTER INDICATES FIXTURE TYPE) REFER TO LIGHT FIXTURE SCHEDULE	WALL OR CEILING
S	SINGLE POLE SWITCH 20A (120/277V)	WALL - 48" AFF
S_3	THREE WAY SWITCH 20A (120/277V)	WALL - 48" AFF
S_4	FOUR WAY SWITCH 20A (120/277V)	WALL - 48" AFF
H	WALL BOX DIMMER SWITCH	WALL - 48" AFF
X X	CEILING OR WALL MOUNTED OCCUPANCY SENSOR (LETTER INDICATES SENSOR TYPE) REFER TO LIGHTING CONTROLS SCHEDULE	WALL OR CEILING
LC X	LOW-VOLTAGE CONTROL STATION (LETTER INDICATES CONTROL STATION TYPE) REFER TO LIGHTING CONTROLS SCHEDULE	WALL - 48" AFF
PC X	PHOTOCELL SENSOR (LETTER INDICATES SENSOR TYPE) REFER TO LIGHTING CONTROLS SCHEDULE	FIELD VERIFY
PP	POWERPACK (LETTER INDICATES POWERPACK TYPE) REFER TO LIGHTING CONTROLS SCHEDULE	ACCESSIBLE CEILING

COMMUNICATION/LOW-VOLTAGE DEVICES

SYMBOL	DESCRIPTION	MOUNTING
CR	CARD READER (VERIFY EXACT REQUIREMENTS)	
	DATA, TELEPHONE, OR COMBO TELE/DATA OUTLET PROVIDE PULLSTRING IN CONDUIT TO ACCESSIBLE CEILING	WALL - 18" AFF
	DATA, TELEPHONE, OR COMBO TELE/DATA OUTLET PROVIDE PULLSTRING IN CONDUIT TO ACCESSIBLE CEILING	FLOOR OR CEILING
TV TV	TELEVISION OUTLET	WALL OR CEILING
	SPEAKER OUTLET	FIELD VERIFY
'TTB'	TELEPHONE TERMINAL BOARD	WALL
	SECURITY CAMERA OUTLET	FIELD VERIFY
	PUSH BUTTON	

POWER EQUIPMENT/DEVICES

SYMBOL	DESCRIPTION	MOUNTING
	SWITCHBOARD OR DISTRIBUTION PANEL REFER TO PANEL SCHEDULES	
	DRY-TYPE TRANSFORMER REFER TO PLANS FOR KVA RATING	
	120/208V, 3Ø, 4W PANELBOARD REFER TO PANEL SCHEDULES	
	277/480V, 3Ø, 4W PANELBOARD REFER TO PANEL SCHEDULES	
J J	JUNCTION BOX	WALL OR CEILING
30/20/3	FUSED SAFETY SWITCH (E.G. 30/20/3 INDICATES A 30A, 3-POLE SWITCH WITH 20A FUSES)	
30/NF/3	NON-FUSED SAFETY SWITCH (E.G. 30/NF/3 INDICATES A 30A, 3-POLE SWITCH WITHOUT FUSES)	
S M	MOTOR RATED SWITCH	
	MOTOR	
	NEMA 5-20R SIMPLEX RECEPTACLE	WALL - 18" AFF
	NEMA 5-20R DUPLEX RECEPTACLE	WALL - 18" AFF
	NEMA 5-20R DUPLEX RECEPTACLE MOUNTED ABOVE COUNTER	WALL - 6" ABOVE FINISHED COUNTER U.N.O.
	NEMA 5-20R QUAD-PLEX RECEPTACLE	WALL - 18" AFF
	NEMA 5-20R SPLIT RECEPTACLE. TOP OUTLET WIRED HOT. BOTTOM OUTLET SWITCHED.	WALL - 18" AFF
	SPECIAL PURPOSE RECEPTACLE REFER TO PLANS FOR NEMA CONFIGURATION	WALL - 18" AFF OR CEILING
USB	NEMA 5-20R - DUPLEX RECEPTACLE WITH USB PORTS SIMILAR TO HUBBELL #USB20AC5W	WALL - 18" AFF
	NEMA 5-20R DUPLEX RECEPTACLE MOUNTED ON CEILING	CEILING - FLUSH
FB1	HUBBELL CFB4 SERIES FLOOR BOX (OR EQUAL) WITH (2) DUPLEX RECEPTACLES AND DATA/COMMUNICATION CONNECTION CAPABILITY	FLOOR - FLUSH
FB2	HUBBELL B24 SERIES FLOOR BOX (OR EQUAL) WITH (1) DUPLEX RECEPTACLE AND DATA/COMMUNICATION CONNECTION CAPABILITY	FLOOR - FLUSH
FB3	HUBBELL B24 SERIES FLOOR BOX (OR EQUAL) FOR POWER AND DATA CONNECTIONS TO PRE-WIRED FURNITURE VERIFY EXACT CONNECTION WITH FURNITURE VENDOR	FLOOR - FLUSH
PK1	HUBBELL S1PT SERIES 4" POKE-THRU (OR EQUAL) WITH (2) DUPLEX RECEPTACLES AND DATA/COMMUNICATION CONNECTION CAPABILITY	FLOOR - FLUSH
PK2	HUBBELL S1PTFF SERIES 4" POKE-THRU (OR EQUAL) FOR POWER AND DATA CONNECTIONS TO PRE-WIRED FURNITURE VERIFY EXACT CONNECTION WITH FURNITURE VENDOR	FLOOR - FLUSH
PK3	HUBBELL S1R6 SERIES 6" POKE-THRU (OR EQUAL) WITH (2) DUPLEX RECEPTACLES AND DATA/COMMUNICATION AND A/V CONNECTION CAPABILITY	FLOOR - FLUSH
	CONDUIT IN OR UNDER FLOOR/GRADE	
	CONDUCTOR HOME RUN - (|) HOT, (||) NUETRAL, (|||) EQUIPMENT GROUND, & ( ) ISOLATED GROUND	
	EQUIPMENT CONNECTION	
	CONDUIT IN CEILING OR WALL	

NOTE: NOT ALL SYMBOLS MAY BE USED.

ARCHITECT
B+A ARCHITECTURE, LLC
600 BROADWAY BLVD, SUITE 290
KANSAS CITY, MO 64105
PH: 816-753-6100

MEP ENGINEER
ENGINEERING BUILDING SOLUTIONS
ADDRESS 1
CITY, STATE ZIP
PH: 913-735-5654

PARKVILLE BOBA TEA SHOP
CREEKSIDE COMMONS, PARKVILLE, MO

SEAL

NOT FOR CONSTRUCTION

ISSUED: MARCH 23, 2023

NO.	REVISION	DATE

DESIGNED BY TT
DRAWN BY LH
CHECKED BY HBD

THIS DRAWING IS THE PROPERTY OF B+A ARCHITECTURE AND IS NOT TO BE REPRODUCED OR COPIED IN WHOLE OR IN PART. IT IS ONLY TO BE USED FOR THE PROJECT AND SITE SPECIFICALLY IDENTIFIED HEREIN AND IS NOT TO BE USED ON ANY OTHER PROJECT.

SCALES AS STATED HEREIN ARE VALID ON THE ORIGINAL DRAWING ONLY. CONTRACTOR SHALL CAREFULLY REVIEW ALL DIMENSIONS AND CONDITIONS SHOWN HEREIN AND AT ONCE REPORT TO THE ARCHITECT ANY ERROR INCONSISTENCY OR OMISSION DISCOVERED.

E101

KITCHEN/BAR ELECTRICAL ROUGH-IN SCHEDULE

ITEM TAG	DESCRIPTION	VOLT	PH.	LOAD			CIRCUIT	MOUNTING		REMARKS
				HP	KW	AMPS		CONN.	RI HT	
E1	BUBBLE TEA SEALING MACHINE	120	1			3.6	LA-11	DCO	NOTE #1	
E2	BOBA TEA SHAKER MACHINE	120	1		0.075		LA-13	DCO	NOTE #1	
E3A	BUBBLE TEA BLENDERS	120	1		1.8		LA-15	DCO	NOTE #1	
E3B	BUBBLE TEA BLENDERS	120	1		1.8		LA-17	DCO	NOTE #1	
E3C	BUBBLE TEA BLENDERS	120	1		1.8		LA-19	DCO	NOTE #1	
E4A	BUBBLE TEA FRUCTOSE DISPENSER	120	1		0.3		LA-21	DCO	NOTE #1	
E4B	BUBBLE TEA FRUCTOSE DISPENSER	120	1		0.3		LA-23	DCO	NOTE #1	
E5	BUNN TEA BREWER	120	1		1.7		LA-25	DCO	NOTE #1	
E6	AUTOMATIC TAPIOCA PEARL BOBA COOKER	208	1			13.5	LA-27/29	SR	NOTE #1	NEMA 6-20R
E7	BUBBLE TEA BAR COUNTER WITH REFRIG.	208	1		3.5		LA-31/33	SR	NOTE #1	
E8	3-DOOR REFRIGERATED PREP TABLE	120	1			4.3	LA-35	DCO	NOTE #1	
E9	BAKERY DISPLAY CASE W/ LED LIGHTING	120	1				LA-37	DCO	NOTE #1	
E10	SIDE BY SIDE COOLER	120	1			3.2	LA-39	DCO	NOTE #1	
E11	SINGLE RACK LOW-TEMP DISHWASHER	120	1			16	LA-41	DCO	NOTE #1	
E13	COMMERCIAL MICROWAVE	208	1		2.1		LA-2/4	SR	NOTE #1	NEMA 6-20R
E14	VENTLESS COUNTERTOP CONVEYOR OVEN	208	1		3.6		LA-6/8	SR	NOTE #1	NEMA 6-30R
E15	TURBO FAN SINGLE DECK CONVECTION OVEN	208	1			27	LA-10/12	DISC	NOTE #1	

GENERAL KITCHEN EQUIPMENT NOTES

#1	COORDINATE ALL EQUIPMENT CONNECTIONS WITH SUPPLIED EQUIPMENT AND VENDOR DRAWINGS PRIOR TO ROUGH-IN.
#2	REFER TO ELECTRICAL PANEL SCHEDULES FOR WIRE SIZE & BREAKER SIZE OF EQUIPMENT CIRCUIT.
#3	PROVIDE AND INSTALL RECEPTACLES, DISCONNECTS, AND ELECTRICAL CONNECTIONS AS REQUIRED FOR POWER. ALL ROUGH-INS AND FINAL CONNECTIONS SHALL BE IN
	ACCORDANCE WITH ALL APPLICABLE CODES & HEALTH DEPT.
#4	PER NEC 210.8(B)(2), ALL SINGLE PHASE RECEPTACLES RATED 150V TO GROUND OR LESS, 50 AMPS OR LESS AND THREE PHASE RECEPTACLES RATED 150V TO GROUND OR LESS,
	100 AMPS OR LESS SHALL BE PROVIDED WITH GFI PROTECTION. WHERE OUTLET IS NOT DESIGNATED WITH 'GFI', ELECTRICAL CONTRACTOR SHALL PROVIDE A "GFI TYPE BREAKER
	OR FACELESS GFI DEVICE ADJACENT TO THE PANEL SERVING THE EQUIPMENT.

CONNECTION LEGEND

DCO - DUPLEX RECEPTACLE, SR - SIMPLEX RECEPTACLE, SPR - SPECIAL PURPOSE RECEPTACLE, JBOX - JUNCTION BOX, BTC - BRANCH TO CONNECTION

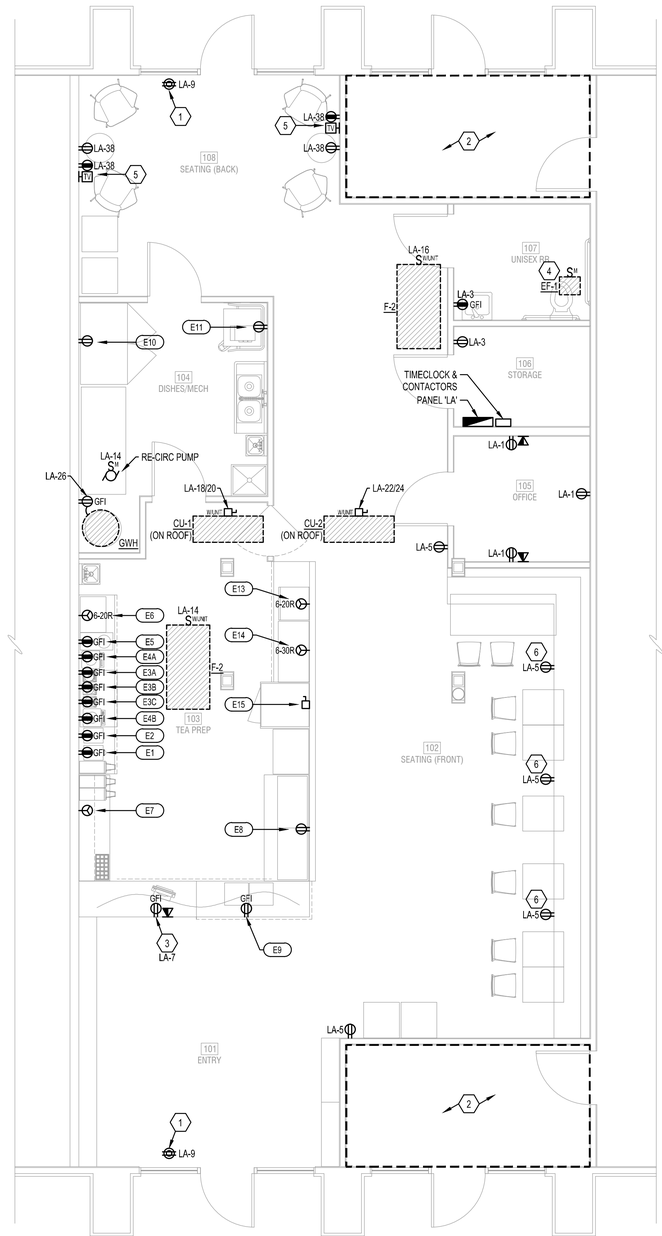

1 **ELECTRICAL POWER PLAN**

SCALE: 1/4" = 1'-0"

GENERAL NOTES

(NOT ALL NOTES APPLY)

1. REFERENCE SHEET E-101 FOR GENERAL NOTES, SYMBOLS, AND ABBREVIATIONS.
2. COORDINATE MOUNTING HEIGHTS AND LOCATIONS FOR ALL DEVICES WITH ARCHITECT AND/OR INTERIOR ELEVATIONS PRIOR TO ROUGH-IN.
3. PROVIDE AND INSTALL 3/4" CONDUIT AND PULL STRINGS FROM TELEPHONE/DATA OUTLETS TO ABOVE ACCESSIBLE CEILING. VERIFY EXACT REQUIREMENTS WITH TELEPHONE EQUIPMENT SUPPLIER AND/OR TENANT.

KEYED NOTES:

1. PROVIDE SHOW WINDOW RECEPTACLE WITHIN 18" OF TOP OF WINDOW AS REQUIRED PER NEC 210.62.
2. NO SCOPE IN THIS AREA. AREA IS PART OF ADJACENT TENANT SPACE.
3. POWER AND DATA FOR POS STATION. FIELD VERIFY EXACT LOCATION WITH MILLWORK PRIOR TO ROUGH-IN.
4. CONTROL INTENT OF EXHAUST FAN IS FOR FAN TO BE CONNECTED TO LIGHTING SWITCHLEG AND ENERGIZE 'ON'/OFF' WITH LIGHT FIXTURES IN THIS AREA.
5. POWER/DATA FOR OWNER PROVIDED TV. FIELD VERIFY EXACT LOCATION WITH OWNER PRIOR TO ROUGH-IN.
6. PROVIDE RECEPTACLE IN FACE OF BANQUETTE. FIELD VERIFY EXACT LOCATION WITH OWNER AND MILLWORK PROVIDER PRIOR TO ROUGH-IN.

ARCHITECT
B+A ARCHITECTURE, LLC
600 BROADWAY BLVD, SUITE 290
KANSAS CITY, MO 64105
PH: 816-753-6100

MEP ENGINEER
ENGINEERING BUILDING SOLUTIONS
ADDRESS 1
CITY, STATE ZIP
PH: 913-735-5654

PARKVILLE BOBA TEA SHOP

CREEKSIDE COMMONS, PARKVILLE, MO

SEAL

NOT FOR CONSTRUCTION

ISSUED: MARCH 23, 2023

NO.	REVISION	DATE

DESIGNED BY TT
DRAWN BY LH
CHECKED BY HBD

THIS DRAWING IS THE PROPERTY OF B+A ARCHITECTURE AND IS NOT TO BE REPRODUCED OR COPIED IN WHOLE OR IN PART. IT IS ONLY TO BE USED FOR THE PROJECT AND SITE SPECIFICALLY IDENTIFIED HEREIN AND IS NOT TO BE USED ON ANY OTHER PROJECT.

SCALES AS STATED HEREIN ARE VALID ON THE ORIGINAL DRAWING ONLY. CONTRACTOR SHALL CAREFULLY REVIEW ALL DIMENSIONS AND CONDITIONS SHOWN HEREIN AND AT ONCE REPORT TO THE ARCHITECT ANY ERROR INCONSISTENCY OR OMISSION DISCOVERED.

E201

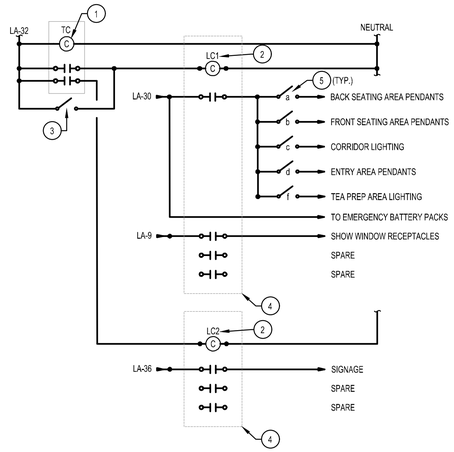

NOTE:

THIS DETAIL IS SCHEMATIC IN NATURE. PROVIDE ALL WIRING, COMPONENTS AND ACCESSORIES AS REQUIRED FOR A COMPLETE AND OPERATIONAL LIGHTING CONTROL SYSTEM.

2 LIGHTING CONTROLS DETAIL

SCALE: NO SCALE

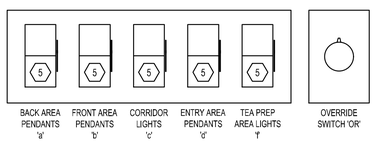

3 SWITCHING DETAIL

SCALE: NO SCALE

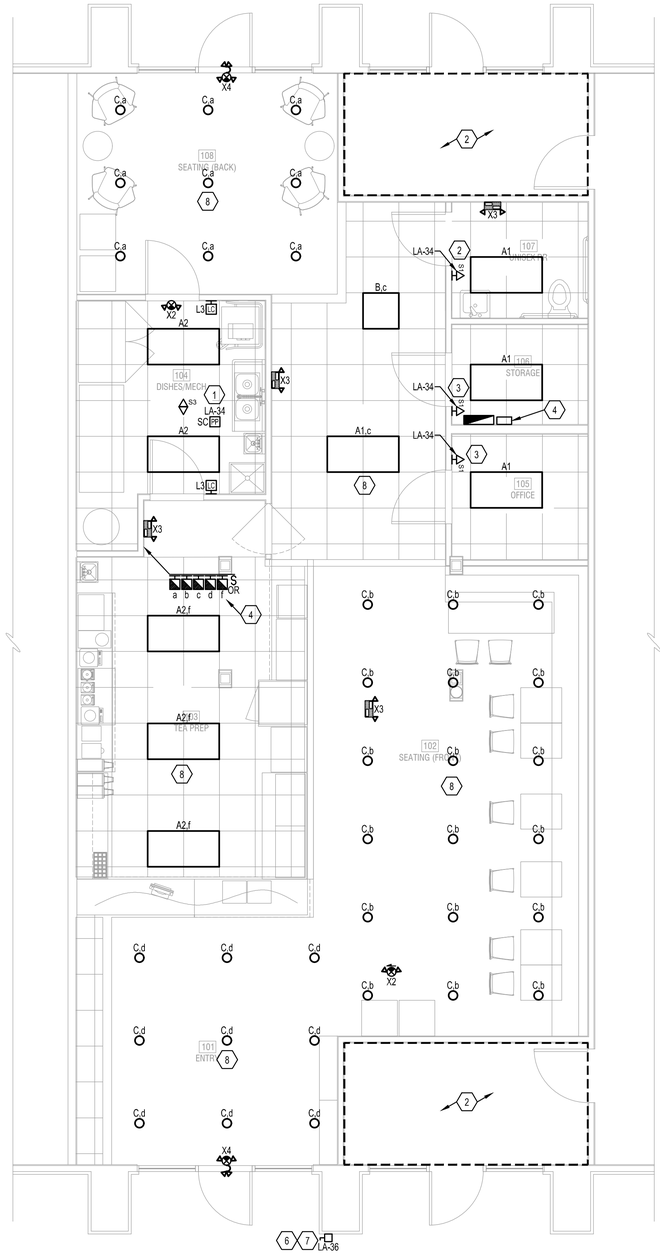

1 ELECTRICAL LIGHTING PLAN

SCALE: 1/4" = 1'-0"

GENERAL NOTES

(NOT ALL NOTES APPLY)

1. REFERENCE SHEET E101 FOR GENERAL NOTES, SYMBOLS, AND ABBREVIATIONS.
2. COORDINATE MOUNTING HEIGHTS AND LOCATIONS FOR ALL DEVICES WITH ARCHITECT AND/OR INTERIOR ELEVATIONS PRIOR TO ROUGH-IN.
3. CIRCUIT ALL EXIT SIGNS TO NEAREST EMERGENCY LIGHTING CIRCUIT (OR NEAREST LIGHTING CIRCUIT IF NO GENERATOR).
4. VERIFY ALL EXISTING BRANCH CIRCUITING. CONTRACTOR SHALL WIRE FIXTURES IN ACCORDANCE WITH SWITCHING INDICATED. CONNECTED LOAD ON 277V-20A CIRCUITS SHALL NOT EXCEED 4000W, 120V-20A CIRCUITS SHALL NOT EXCEED 1800W.
5. CIRCUIT NUMBERS ARE SHOWN FOR REFERENCE ONLY. CONTRACTOR TO FIELD VERIFY EXISTING CONDITIONS.

KEYED NOTES:

1. CONTROL INTENT FOR THIS AREA IS FOR LIGHTS TO BE MANUAL 'ON', AUTO 'OFF' WITH MANUAL OVERRIDE AVAILABLE VIA THE LOW-VOLTAGE CONTROL STATION.
2. CONTROL INTENT FOR THIS AREA IS FOR LIGHTS TO BE AUTO 'ON', AUTO 'OFF' WITH MANUAL OVERRIDE AVAILABLE VIA THE WALL OCCUPANCY SWITCH.
3. CONTROL INTENT FOR THIS AREA IS FOR LIGHTS TO BE MANUAL 'ON', AUTO 'OFF' WITH MANUAL OVERRIDE AVAILABLE VIA THE WALL OCCUPANCY SWITCH.
4. FIELD COORDINATE EXACT LOCATION OF TIMESWITCH, OVERRIDE SWITCHES AND CONTACTORS WITH OWNER.PRIOR TO ROUGH-IN. OVERRIDE SWITCHES MUST BE LOCATED WHERE THE LIGHTS BEING CONTROLLED ARE VISIBLE. REFER TO DETAIL 2 (THIS SHEET) FOR ADDITIONAL INFORMATION.
5. PROVIDE WALLBOX DIMMER FOR THIS ZONE. COORDINATE EXACT DIMMER WITH EACH FIXTURE TYPE TO ENSURE COMPATIBILITY.
6. CONTROL INTENT FOR EXTERIOR SIGNAGE IS FOR SIGNAGE TO BE ON TIME-OF DAY SCHEDULE. COORDINATE TIME-OF-DAY SCHEDULE WITH OWNER.
7. PROVIDE NEMA 3R, LOCKABLE DISCONNECT SWITCH FOR EXTERIOR SIGNAGE. FIELD VERIFY EXACT LOCATION PRIOR TO ROUGH-IN.
8. CONTROL INTENT FOR THIS AREA IS FOR LIGHTS TO BE 'ON'/'OFF' VIA TIME-OF DAY SCHEDULE WITH MANUAL OVERRIDE CONTROLS AVAILABLE AT THE SWITCH BANK. REFER TO DETAILS 2 & 3 (THIS SHEET) FOR ADDITIONAL INFORMATION. COORDINATE TIME-OF-DAY SCHEDULE WITH OWNER.

LIGHTING CONTROL KEYED NOTES:

1. PROVIDE TORK DIGITAL SERIES, MODEL DGLC200A-NC (2-CHANNEL) TIMECLOCK (OR EQUAL).
2. PROVIDE SQUARE D MODEL 8903 ELECTRICALLY HELD LIGHTING CONTACTORS (LC1 & LC2) WITH POLE QUANTITY AS REQUIRED.
3. PROVIDE PARAGON #SWP2H 2-HOUR SPRING WOUND OVERRIDE SWITCH (OR EQUAL).
4. PROVIDE NEMA 1 ENCLOSURE TO HOUSE ALL CONTACTORS INDICATED.
5. REMOTE MANUAL SWITCH. REFER TO SWITCHING DETAIL (THIS SHEET) FOR ADDITIONAL INFORMATION.

ARCHITECT
B+A ARCHITECTURE, LLC
600 BROADWAY BLVD, SUITE 290
KANSAS CITY, MO 64105
PH: 816-753-6100

MEP ENGINEER
ENGINEERING BUILDING SOLUTIONS
ADDRESS 1
CITY, STATE ZIP
PH: 913-735-5654

PARKVILLE BOBA TEA SHOP

CREEKSIDE COMMONS, PARKVILLE, MO

SEAL

NOT FOR CONSTRUCTION

ISSUED: MARCH 23, 2023

NO.	REVISION	DATE

DESIGNED BY TT
DRAWN BY LH
CHECKED BY HBD

THIS DRAWING IS THE PROPERTY OF B+A ARCHITECTURE AND IS NOT TO BE REPRODUCED OR COPIED IN WHOLE OR IN PART. IT IS ONLY TO BE USED FOR THE PROJECT AND SITE SPECIFICALLY IDENTIFIED HEREIN AND IS NOT TO BE USED ON ANY OTHER PROJECT.

SCALES AS STATED HEREIN ARE VALID ON THE ORIGINAL DRAWING ONLY. CONTRACTOR SHALL CAREFULLY REVIEW ALL DIMENSIONS AND CONDITIONS SHOWN HEREIN AND AT ONCE REPORT TO THE ARCHITECT ANY ERROR INCONSISTENCY OR OMISSION DISCOVERED.

E301

LIGHTING FIXTURE SCHEDULE

FIXT. TYPE	DESCRIPTION & MANUFACTURER OPTIONS	LAMPS NO.	LAMPS TYPE	FIXT. VOLT	TOTAL WATTS	FINISH	REMARKS/MOUNTING	NOTES
A1	Field Adjustable, 2x4 LED Backlit Panel w/ 0-10V Dimming M# FSC LTG #FPB-24-5000L-AOK-30W35K	1	LED	UNV	30W	Standard	Recessed (Lay-In)	
A2	Field Adjustable, 2x4 LED Backlit Panel w/ 0-10V Dimming M# FSC LTG #FPB-24-5000L-AOK-35W35K	1	LED	UNV	35W	Standard	Recessed (Lay-In)	
B	Field Adjustable, 2x2 LED Backlit Panel w/ 0-10V Dimming M# FSC LTG #FPB-22-3500L-AOK-25W35K	1	LED	UNV	25W	Standard	Recessed (Lay-In)	
C	LED Pendant w/ 0-10V Dimming M# CASEY ARCH LTG #GLB-3118-24-ST	1	LED	UNV	13W	Coord. w/ Architect	Pendant (Verify Ht w/ Architect)	
X1	LED Exit Sign, Single/Double Sided, Universal Mount, Emergency Battery Pack. Provide Arrows as Indicated. M# EVENLITE #TLX-EM-RU-W DUAL LITE #EVE-U-R-W-E	1	LED	UNV	2W		Wall/Ceiling/Pendant	1
X2	Combination LED Exit Sign and Emergency Light Fixture, Universal Mount, Emergency Battery Pack. Provide Arrows as Indicated. M# EVENLITE #TCXCOM-R-U-W DUAL LITE #EVC-U-R-W	1	LED	UNV	2W		Wall/Ceiling/Pendant	1
X3	LED Emergency Light w/ (2) 2-Watt Adjustable LED Heads and Emergency Battery Backup M# EVENLITE #TCL-4-W DUAL LITE #EV4D-02L	2	LED	UNV	5W	White	Surface (Wall/Ceiling)	1
X4	Combination LED Exit Sign and Emergency Light Fixture w/ Exterior Rated Remote Emergency Heads, Universal Mount, Emergency Battery Pack. Provide Arrows as Indicated. M# EVENLITE #TCXCOM-R-U-W-PRWLED2MV DUAL LITE #EVC-U-R-W-D4 WITH EVO-D-X	1	LED	UNV	5W		Wall/Ceiling/Pendant	1

NOTES:
1. Circuit Emergency Battery Packs and Exit Signs to Local Lighting Circuit Ahead of Any Means of Control for Proper Operation.

LIGHTING CONTROLS SCHEDULE

FIXTURE TAG	MANUFACTURER	MODEL #	SETTINGS	DESCRIPTION	NOTES
SC	ACUITY BRANDS: nLIGHT	nPP16 SERIES	ON: MANUAL OFF: 20 MINUTE DELAY	ON/OFF ROOM SWITCH CONTROLLER LINE VOLTAGE - SINGLE RELAY	1,2,4
L3	ACUITY BRANDS: nLIGHT	nPODM	-	ON/OFF LOW VOLTAGE SWITCH WITH 1-CHANNEL CONTROL	1,6
S1	SENSOR SWITCH	WSX SERIES	ON: AUTOMATIC OFF: 20 MINUTE DELAY	WALL MOUNT OCCUPANCY SENSOR LINE VOLTAGE - SINGLE RELAY	1
S3	ACUITY BRANDS: nLIGHT	nCM-9 SERIES	-	CEILING MOUNT OCCUPANCY SENSOR - SMALL MOTION LOW VOLTAGE	3
WIRE	-	-	-	CAT5, CAT5e, OR CAT 6. STANDARD OR SOLID. TERMINATED AS RJ45 TIA/EIA-568B	

NOTES:
1. COORDINATE ALL MODEL NUMBERS WITH MANUFACTURER PRIOR TO ORDERING. PROVIDE DEVICES TO MEET CONTROL INTENT INDICATED ON THE DRAWINGS.
2. PROVIDE 6'-0" OF EXCESS CONTROL WIRING, COILED AND TIED, BETWEEN CEILING MOUNTED OCCUPANCY SENSOR AND CORRESPONDING LOAD CONTROLLER.
3. MODIFY LOCATIONS OF CEILING MOUNTED OCCUPANCY SENSORS AS REQUIRED SO THAT NO OCCUPACNY SENSORS IS WITHIN 4'-0" OF AN HVAC SUPPLY DIFFUSER.
4. LOCATE DEVICE ABOVE CEILING OR AT STRUCTURE IN ACCESSIBLE LOCATION. LOCATIONS SHOWN ON DRAWINGS ARE SCHEMATIC. ADD ACCESS PANEL WITHIN CEILING IF NECESSARY. COORDINATE ACCESS PANEL LOCATION AND SPECIFICATION DIRECTLY WITH ARCHITECT.
5. LOCATION SHOWN ON PLAN FOR REFERENCE ONLY. CONTRACTOR MAY RELOCATE BRIDGE PORTS FOR A MORE ECONOMICAL LAYOUT IF DESIRED.
6. PROVIDE DEVICES WITH DEFAULT MANUFACTURE MARKINGS ON BUTTONS.
7. ROUTE RECEPTACLE CIRCUIT INDICATED ON PLAN AS "CONTROLLED RECEPTACLES" THROUGH PLUG LOAD CONTROLLER FOR AUTOMATIC ON/OFF CONTROL VIA OCCUPACNY SENSOR. ONE CONTROLLED CIRCUIT PER PLUG CONTROLLER.
8. DEVICE TO BE INSTALLED IN SINGLE GANG BOX. COORDINATE TIME-OF-DAY SCHEDULES WITH OWNER FOR ZONES TO BE ON TIME-OF-DAY CONTROL.

GENERAL NOTES

1. THIS RISER DIAGRAM REPRESENTS (AS ACCURATELY AS POSSIBLE) THE ELECTRICAL DISTRIBUTION SYSTEM. FIELD VERIFY ALL SIZES OF EQUIPMENT, CONDUCTORS, FUSES, ETC. ALL EQUIPMENT AND CONDUCTORS ARE EXISTING TO REMAIN UNLESS NOTED OTHERWISE.

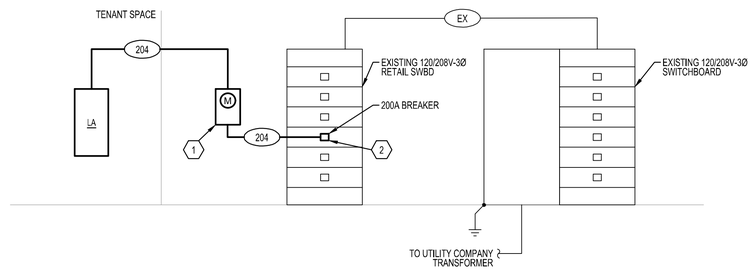

1 ELECTRICAL RISER DIAGRAM

SCALE: NO SCALE

PANEL LA

VOLTAGE/PHASE: **208Y/120V, 3PH, 4W**
BUS AMPERAGE: **200A**
MAIN TYPE: **200A MCB**

AFC VALUE: **VERIFY**
AIC RATING: **VERIFY**
MOUNTING: **SURFACE (NEMA 1)**

GROUNDS: **EG (PER T250.122)**
ISOLATED GROUND BUS: **NO**
SERVICE ENTRANCE RATED: **NO**

ALL LOADS IN VA

	LTG	RCPT	MOTOR	HEAT	COOL	MISC	KITCHEN	ELEV	DESCRIPTION	AMP	P	WIRE	CKT #	PHASE	CKT #	WIRE	P	AMP	DESCRIPTION	LTG	RCPT	MOTOR	HEAT	COOL	MISC	KITCHEN	ELEV	
		540							OFFICE AREA RCPTS	20	1	12	1	A	2	12	2	20	ITEM E13 - MICROWAVE							1080		GF
		360							STORAGERR RCPTS	20	1	12	3	B	4											1950		
		900							FRONT SEATING RCPTS	20	1	12	5	C	6	10	2	30	ITEM E14 - CONVEY OVEN							1800		GF
		180							POS STATION	20	1	12	7	A	8											1800		
TC		360							STOREFRONT RCPTS	20	1	12	9	B	10	8	2	35	ITEM E15 - TURBO OVEN							2808		GF
							432		ITEM E1 - SEALING MACH	20	1	12	11	C	12											2808		
							75		ITEM E2 - BOBA SHAKER	20	1	12	13	A	14	12	1	15	FURNACE F-1			960						
							1800		ITEM E6A - BLENDER	20	1	12	15	B	16	12	1	15	FURNACE F-2			960						
							1800		ITEM E6B - BLENDER	20	1	12	17	C	18	8	2	35	COND. UNIT 'DU-1'					1860				
							1800		ITEM E6C - BLENDER	20	1	12	19	A	20									1860				
							300		ITEM E4A - DISPENSER	20	1	12	21	B	22	8	2	35	COND. UNIT 'DU-2'					1860				
							300		ITEM E4B - DISPENSER	20	1	12	23	C	24													
							1700		ITEM E5 - TEA BREWER	20	1	12	25	A	26	12	1	20	WATER HEATER RCPT						372			
GF							1404			20	2	12	27	B	28	12	1	20	RE-CIRC PUMP			50						
							1404		ITEM E8 - BOBA COOKER				29	C	30	12	1	20	SEATING/ENTRY LTG	628								TC
GF							1750			30	2	10	31	A	32	12	1	20	TIME CLOCK						200			
							1750		ITEM E7 - TEA COUNTER				33	B	34	12	1	20	OFFICE/RR/DISH LTG	160								
GF							516		ITEM E9 - REF TABLE	20	1	12	35	C	36	12	1	20	SIGNAGE	1200								
	50								ITEM E9 - BAKE DISPLAY	20	1	12	37	A	38	12	1	20	BACK SEATING RCPTS		720							
GF							384		ITEM E10 - COOLER	20	1	12	39	B	40				SPACE ONLY									
GF							1620		ITEM E11 - DISHWASHER	20	1	12	41	C	42				SPACE ONLY									
	50	2340	0	0	0	0	17335	0	**TOTALS**										**TOTALS**	1988	720	1970	0	7438	572	11316	0	

NEC CODE REFERENCES

* 100% OF 125% OF LARGEST MOTOR + 100% SUM OF REMAINING MOTORS
** 125% OF LOAD
*** ELEVATOR DEMAND FACTOR BASED ON NEC T620.14.

PANEL ABBREVIATIONS

GF - GROUND FAULT BREAKER	EM - PROVIDE EMERGENCY LOCKING TAB
ST - SHUNT TRIP BREAKER	FA - FIRE ALARM. PROVIDE RED LOCKING TAB
AF - ARC FAULT BREAKER	LOK - PROVIDE PADLOCKABLE BREAKER
GFAF - COMBO ARC/GROUND FAULT BREAKER	OL - REFER TO ONELINE DIAGRAM FOR WIRE SIZE
IG - PROVIDE ISOLATED GROUND	TC - CIRCUIT CONTROLLED VIA TIME CLOCK

PANEL NOTES

PHASE LOAD SUMMARY

TOTAL	PHASE	LTG	RCPT	MOTOR	HEAT	COOL	MISC	KITCHEN	ELEV
13057	A	50	1440	960	0	1860	572	8175	0
13248	B	160	720	1010	0	1860	0	8496	0
17427	C	1828	900	0	0	3719	0	10980	0

PANEL LOAD SUMMARY

43729	CONNECTED VA	2038	3060	1970	0	7438	572	28651	0
—	DEMAND FACTORS	1.25	—	—	1.00	1.00	1.00	1.00	1.00
44239	DEMAND VA	2548	3060	1970	0	7438	572	28651	0
0	SHOW WINDOW DEMAND								
0	TRA OK LTG DEMAND								
0%	SPARE								
44239	DEMAND VA + SPARE								
122.8	TOTAL DESIGN AMPS								

FEEDER SCHEDULE

THHN/THWN COPPER CONDUCTORS W/ EG CONDUCTOR
XHHW ALUMINUM CONDUCTORS W/ EG CONDUCTOR

CONDUCTORS & GROUND				AMPS
CODE	SETS	CONDUCTORS	RACEWAY	
204	-	4#3/0, 1#6 G.	2"	200
EX		EXISTING CONDUCTORS TO REMAIN		

NOTES:
1. ALL CONDUCTORS AMPACITY BASED ON THE NEC TABLE 310-16 FOR CONDUCTORS W/ 75°C INSULATION.
2. ALL RACEWAY SIZES (EMT/RMC/PVC 40) BASED ON THE NEC TABLE 4(CHAPTER 9), 40% FILL COLUMN.
3. ELECTRICAL CONTRACTOR TO VERIFY ALL EQUIPMENT CONDUCTOR TERMINATION TEMPERATURE RATINGS (IE, 60°C OR 75°C), ADJUST CONDUCTOR AMPACITY AND CONDUIT SIZES ACCORDINGLY.
4. VERIFY MAXIMUM NO. OF SETS OF SERVICE ENTRANCE CONDUCTORS ALLOWED W/ UTILITY CO.
5. EQUIPMENT GROUNDING CONDUCTORS BASED ON T250.122. GROUND TO BE ADJUSTED PER T250.66 FOR SEPARATELY DERIVED SYSTEMS.
6. ALUMINUM FEEDERS NOT TO BE USED ON TRANSFORMER SECONDARY CONDUCTORS.

VOLTAGE DROP CHART

BRANCH CIRCUIT VOLTAGE DROP WIRING
SCHEDULE FOR 1Ø CIRCUITS

BRANCH CIRCUIT RATING (AMPS)	WIRE SIZE (AWG)	MAXIMUM LENGTH OF BRANCH CIRCUIT (FEET) 120V	208V	240V	277V	480V
20A	#12	50	90	110	125	200
	#10	80	150	175	200	350
	#8	140	230	280	320	550
	#6	215	375	430	500	870
30A	#10	50	100	110	130	225
	#8	80	160	180	210	360
	#6	135	250	280	325	560
	#4	220	400	450	525	910

NOTES:
1. PROVIDE BRANCH CIRCUIT CONDUCTORS AS INDICATED IN THE TABLE ABOVE FOR ALL LIGHTING AND RECEPTACLE BRANCH CIRCUITS. WHERE BRANCH CIRCUITS SERVE DEDICATED EQUIPMENT, THE CONTRACTOR MAY PERFORM VOLTAGE DROP CALCULATIONS BASED ON ACTUAL EQUIPMENT CONNECTED LOAD AND PROVIDE CONDUCTORS APPROPRIATELY SIZED TO LIMIT VOLTAGE DROP TO A MAXIMUM OF 3%.
2. CONDUCTOR SIZES ARE BASED ON SOLID COPPER CONDUCTORS FOR WIRES SMALLER THAN #6 AND STRANDED COPPER CONDUCTORS FOR WIRES #6 AND LARGER, IN A SINGLE METAL CONDUIT.
3. LIMITS FOR CONDUCTOR LENGTH SHOWN ARE BASED ON A MAXIMUM OF 3% VOLTAGE DROP TO COMPLY WITH THE NEC FOR CIRCUITS LOADED UP TO 80% OF THE BRANCH BREAKER RATING. FIELD VERIFY EXACT BRANCH CIRCUIT LENGTHS AND PROVIDE CONDUCTORS APPROPRIATELY SIZED TO LIMIT VOLTAGE DROP TO 3%.

UNLESS NOTED OTHERWISE, WIRE SIZES CALLED OUT IN PANEL SCHEDULES DO NOT ACCOUNT FOR VOLTAGE DROP. CONTRACTOR SHALL INCREASE WIRE SIZES AS REQUIRED UTILIZING VOLTAGE DROP TABLE PROVIDED.

GENERAL NOTES

(NOT ALL NOTES APPLY)

1. REFERENCE SHEET E101 FOR GENERAL NOTES, SYMBOLS, AND ABBREVIATIONS.
2. COORDINATE MOUNTING HEIGHTS AND LOCATIONS FOR ALL DEVICES WITH ARCHITECT AND/OR INTERIOR ELEVATIONS PRIOR TO ROUGH-IN.
3. FIELD COORDINATE ALL ELECTRICAL WORK WITH OWNER AND UTILIITY COMPANY PRIOR TO START OF PROJECT.

KEYED NOTES:

1. PROVIDE UTILITY CO. METER PER UTILITY COMPANY STANDARDS. INSTALLATION SHALL MEET ALL UTILITY COMPANY REQUIREMENTS AND LOCAL CODES.
2. PROVIDE 200A, 3-POLE BREAKER IN EXISTING RETAIL SWITCHBOARD TO SERVE NEW TENANT SPACE.

ARCHITECT
B+A ARCHITECTURE, LLC
600 BROADWAY BLVD, SUITE 290
KANSAS CITY, MO 64105
PH: 816-753-6100

MEP ENGINEER
ENGINEERING BUILDING SOLUTIONS
ADDRESS 1
CITY, STATE ZIP
PH: 913-735-5654

PARKVILLE BOBA TEA SHOP
CREEKSIDE COMMONS, PARKVILLE, MO

SEAL

NOT FOR CONSTRUCTION

ISSUED: MARCH 23, 2023

NO.	REVISION	DATE

DESIGNED BY TT
DRAWN BY LH
CHECKED BY HBD

THIS DRAWING IS THE PROPERTY OF B+A ARCHITECTURE AND IS NOT TO BE REPRODUCED OR COPIED IN WHOLE OR IN PART. IT IS ONLY TO BE USED FOR THE PROJECT AND SITE SPECIFICALLY IDENTIFIED HEREIN AND IS NOT TO BE USED ON ANY OTHER PROJECT.

SCALES AS STATED HEREIN ARE VALID ON THE ORIGINAL DRAWING ONLY. CONTRACTOR SHALL CAREFULLY REVIEW ALL DIMENSIONS AND CONDITIONS SHOWN HEREIN AND AT ONCE REPORT TO THE ARCHITECT ANY ERROR INCONSISTENCY OR OMISSION DISCOVERED.

E401

16000 - ELECTRICAL

GENERAL

DESCRIPTION
DIVISION 16 OF THE SPECIFICATIONS COVERS ALL ELECTRICAL WORK FOR THE PROJECT. WORK SHALL INCLUDE LABOR, MATERIAL AND ACCESSORIES NECESSARY TO ACCOMPLISH THE WORK AS SPECIFIED AND SHOWN ON THE DRAWINGS, INCLUDING CONNECTION AND CHECKOUTS OF EQUIPMENT FURNISHED BY OTHERS (OTHER TRADES, THE OWNER AND OTHER CONTRACTORS), AND TO ALL EQUIPMENT ITEMS AND AS INDICATED ON DRAWINGS OR AS REQUIRED.

THE ARCHITECTURAL SPECIFICATIONS AND DRAWINGS INCLUDING THE GENERAL - CONDITIONS, INCLUDING ALL SUPPLEMENTS ISSUED THERETO, INSTRUCTIONS TO BIDDERS, AND OTHERS PERTINENT DOCUMENTS ISSUED BY THE ARCHITECT ARE A PART OF THESE SPECIFICATIONS AND ELECTRICAL DRAWINGS. THIS TRADE SHALL CONSULT THEM FOR INSTRUCTIONS WHICH APPLY. DRAWINGS INDICATE THE GENERAL ARRANGEMENT OF THE ELECTRICAL LAYOUT AND WORK INCLUDED. ELECTRICIAN SHALL FOLLOW DRAWINGS IN LAYOUT THE ELECTRICAL WORK AND CONSULT THE DRAWINGS AND LAYOUTS OF OTHER TRADES TO VERIFY LOCATION AND SPACES IN WHICH WORK WILL BE INSTALLED.

CODES, PERMITS, INSPECTION AND COMMISSIONING
INSTALLATION SHALL COMPLY WITH ALL LAWS APPLYING TO ELECTRICAL WORK IN EFFECT, INCLUDING THE REQUIREMENTS OF THE NATIONAL ELECTRICAL CODE (N.E.C.), THE NATIONAL ELECTRICAL SAFETY CODE, ALL LOCAL GOVERNING CODES AND ORDINANCES, WITH THE REGULATIONS OF THE SERVING ELECTRICAL UTILITY COMPANY. PROVIDE ALL REQUIRED PERMITS AND INCLUDE THE COST OF SAME IN THE COST OF THE PROJECT. OBTAIN AND PAY FOR (WITHOUT ADDITIONAL EXPENSE TO THE OWNER) ALL REQUIRED INSPECTIONS AND REVIEWS. PROVIDE FOR AND PAY ALL EXPENSES (WITHOUT ADDITIONAL EXPENSE TO THE OWNER) ASSOCIATED WITH LIGHTING AND LIGHTING CONTROLS COMMISSIONING. ALL COMMISSIONING DOCUMENTATION SHALL BE CERTIFIED AND GIVEN TO OWNER AND DESIGN PROFESSIONAL.

QUALITY ASSURANCE
THE FOLLOWING INDUSTRY STANDARDS AS APPLICABLE TO ELECTRICAL WORK SHALL APPLY TO THE WORK OF THIS DIVISION EXCEPT THAT, WHERE THE REQUIREMENTS OF THESE SPECIFICATIONS ARE MORE THAN THE LISTED STANDARD, THESE SPECIFICATIONS SHALL TAKE PRECEDENCE:

UL - UNDERWRITERS' LABORATORIES
NEMA - NATIONAL ELECTRICAL MANUFACTURERS' ASSOCIATION
NECA - NATIONAL ELECTRICAL CONTRACTOR'S ASSOCIATION
ANSI - AMERICAN NATIONAL STANDARDS INSTITUTE
ASTM - AMERICAN SOCIETY OF TESTING MATERIALS.

ALL MATERIALS SHALL BE NEW, UL LISTED AND LABELED WHERE LABELED MATERIALS ARE AVAILABLE, UNDAMAGED AND FREE OF DEFECTS AT TIME OF INSTALLATION. MATERIALS OR EQUIPMENT DAMAGED IN SHIPMENT OR OTHERWISE DAMAGED PRIOR TO OR DURING INSTALLATION SHALL NOT BE REPAIRED AT THE JOB SITE, BUT SHALL BE REPLACED WITH NEW MATERIALS. WHEN THE MANUFACTURER'S NAME APPEARS IN THESE SPECIFICATIONS AND DRAWINGS, IT SHALL BE CONSTRUED THAT THE MANUFACTURER HAS TO MEET THE FULL REQUIREMENTS OF THE SPECIFICATIONS AND DRAWINGS.

SUBMITTALS
SUBMIT SHOP DRAWINGS AND PRODUCT DATA FOR EQUIPMENT TO THE ARCHITECT FOR ENGINEER'S REVIEW ELECTRONICALLY OR HARD COPIES. INCLUDE SUFFICIENT INFORMATION TO INDICATE COMPLETE COMPLIANCE WITH SPECIFICATIONS. PROVIDE SUBMITTALS AS EARLY AS REQUIRED TO SUPPORT THE PROJECT SCHEDULE. ALLOW ONE WEEK FOR ENGINEER REVIEW TIME. THE ENGINEER'S SUBMITTAL REVIEWS WILL NOT RELIEVE THE CONTRACTOR FROM RESPONSIBILITY FOR ERRORS IN DIMENSIONS, DETAILS, SIZE OF MEMBERS, OR QUANTITIES; OR FOR OMITTING COMPONENTS OR FITTINGS; OR FOR NOT COORDINATING ITEMS WITH ACTUAL BUILDING CONDITIONS AND/OR OTHER TRADES.

OWNER RECORDS
ACCUMULATE DURING THE PROGRESS OF THE JOB, THE FOLLOWING DATA IN DUPLICATE, AND PREPARE IN A NEAT BROCHURE OR PACKET FOLDER TO BE TURNED OVER TO THE OWNER AT SUBSTANTIAL COMPLETION: RECORD DRAWINGS PER ABOVE.

ALL WARRANTIES, GUARANTEES, AND MANUFACTURER'S DIRECTION ON EQUIPMENT & MATERIAL FURNISHED.

COMPLETE PLAIN ENGLISH STEP-BY-STEP OPERATING INSTRUCTIONS FOR THE ELECTRICAL SYSTEM. ONE COPY OF THESE INSTRUCTIONS SHALL BE FRAMED AND POSTED AS DIRECTED ON THE PREMISES.

CERTIFIED LIGHTING AND LIGHTING CONTROLS COMMISSIONING AS REQUIRED BY CURRENTLY ADOPTED ENERGY CODE REQUIREMENTS.

MANUFACTURERS' NAMES AND CATALOG NUMBERS
IN SOME INSTANCES, SPECIFIC REFERENCES HAVE BEEN MADE TO ONE OR MORE MANUFACTURER'S NAME AND MODEL OR CATALOG NUMBERS. USE OF NAMES AND CATALOG NUMBERS DOES NOT INDICATE THAT THE EQUIPMENT SPECIFIED IN NECESSARILY AN "OFF THE SHELF" ITEM. VARIANCES MAY BE DUE TO REQUIREMENT OF DESIRED FINISH, MATERIAL OR OTHER MODIFICATION.

IN THE CASE OF PANELBOARDS, SAFETY SWITCHES AND OTHER EQUIPMENT REQUIRING WIRE AND CABLE TERMINATIONS, ASCERTAIN THAT LUG SIZES AND WIRING GUTTERS OR WIRING SPACE ALLOWED IS PROPER FOR THE WIRES AND CABLES CONTAINED THEREIN.

WHEN APPROVAL IS GIVEN FOR THE USE OF EQUIPMENT DIFFERING FROM THAT SHOWN ON DRAWINGS IN REGARD TO FOUNDATIONS, SPACE FOR PIPING, DUCTWORK, WIRING, INSULATION, ETC. CHANGES REQUIRED TO ACCOMPLISH SUCH DIFFERENCES SHALL BE ACCOMPLISHED AT NO COST TO THE OWNER.

PROTECTION OF EQUIPMENT
ELECTRICAL EQUIPMENT SHALL BE PROTECTED FROM THE WEATHER, IN PARTICULAR, DRIPPING OR SPLASHING WATER, AT ALL TIMES DURING SHIPMENT, STORAGE AND CONSTRUCTION. MANUFACTURER'S RECOMMENDATIONS WITH REGARD TO STORAGE, PROTECTION, AND HANDLING SHALL BE FOLLOWED.

SHOULD ANY APPARATUS BE SUBJECTED TO POSSIBLE INJURY DUE TO WATER, IT SHALL BE THOROUGHLY DRIED AND PUT THROUGH A DIELECTRIC TEST, AT THE EXPENSE OF THE CONTRACTOR, TO ASCERTAIN THE SUITABILITY OF THE APPARATUS OR IT SHALL BE REPLACED WITHOUT ADDITIONAL COST TO THE OWNER.

DAMAGED OR DEFECTIVE EQUIPMENT: INSPECT ALL ELECTRICAL EQUIPMENT AND MATERIALS PRIOR TO INSTALLATION. INSTALLATION OR PLACEMENT INTO SERVICE OF DAMAGED MATERIALS WITHOUT THE PRIOR WRITTEN CONSENT OF THE OWNER IS PROHIBITED. REPLACE OR REPAIR TO NEW CONDITION, AS CERTIFIED BY THE MANUFACTURER, AND TEST DAMAGED EQUIPMENT IN COMPLIANCE WITH INDUSTRY STANDARDS AT NO ADDITIONAL COST TO THE OWNER. EQUIPMENT REQUIRED FOR THE TESTING SHALL BE PROVIDED BY THE CONTRACTOR.

WORKING CLEARANCE
THE SIZE OF ELECTRICAL EQUIPMENT SHOWN ON THE DRAWINGS IS BASED ON DIMENSIONS OF A PARTICULAR MANUFACTURER, (GENERALLY THE FIRST NAMED). WHILE OTHER MANUFACTURERS MAY BE ACCEPTABLE, IT IS THE RESPONSIBILITY OF THE TRADE TO DETERMINE IF THE EQUIPMENT PROPOSED WILL FIT IN THE ALLOCATED SPACE.

INSTALL ALL EQUIPMENT IN A MANNER TO PERMIT ACCESS TO ALL SURFACES. MAINTAIN PROPER CLEARANCE TO MEET ALL SAFETY AND OPERATING CODES, PARTICULARLY N.E.C. INCLUDE ALL REQUIREMENTS DICTATED BY OPERATION, CONTROL, ADJUSTMENT, MAINTENANCE AND POSSIBLE REPLACEMENT OF EQUIPMENT IN DETERMINING CLEARANCE.

SHOULD THERE BE APPARENT VIOLATIONS OF N.E.C. CLEARANCE, NOTIFY THE ARCHITECT-ENGINEER BEFORE PROCEEDING WITH CONNECTION OR PLACEMENT OF EQUIPMENT.

COORDINATION
INSTALLATION STUDIES ARE REQUIRED TO COORDINATE THE ELECTRICAL WORK WITH THE WORK OF OTHER TRADES. PREPARE COORDINATION DRAWINGS AT ACCURATE SCALE WHERE SEVERAL ELEMENTS OF ELECTRICAL OR COMBINED MECHANICAL/STRUCTURAL/ELECTRICAL WORK MUST BE SEQUENCED AND POSITIONED WITH PRECISION IN ORDER TO FIT INTO THE AVAILABLE SPACE.

SHOW THE ACTUAL PHYSICAL DIMENSIONS REQUIRED FOR PROPER INTEGRATION OF EQUIPMENT WITH BUILDING SYSTEMS.

PROVIDE APPROVED SHOP DRAWINGS TO ALL REQUIRED DISCIPLINES AND VERIFY FINAL ELECTRICAL CHARACTERISTICS BEFORE ROUGHING POWER FEEDS TO ANY EQUIPMENT. WHEN ELECTRICAL DATA ON APPROVED SHOP DRAWINGS DIFFERS FROM CONTEMPLATED DESIGN, MAKE NECESSARY ADJUSTMENTS TO THE WIRING, DISCONNECTS, AND BRANCH-CIRCUIT PROTECTION FOR THE EQUIPMENT ACTUALLY INSTALLED AT NO ADDITIONAL COST TO THE OWNER.

DAMAGE FROM INTERFERENCE CAUSED BY INADEQUATE COORDINATION SHALL BE RECTIFIED AT NO ADDITIONAL COST TO THE OWNER.

WORKMANSHIP
ALL WORK SHALL BE EXECUTED IN A WORKMANLIKE MANNER AND SHALL PRESENT A NEAT MECHANICAL APPEARANCE WHEN COMPLETED.

ANY MATERIAL ITEMS OR WORK NOT SHOWN ON THE DRAWINGS, BUT MENTIONED IN THESE SPECIFICATIONS OR VISA-VERSA, OR ANY ACCESSORIES NECESSARY TO MAKE THE WORK COMPLETE IN ALL RESPECTS AND READY FOR OPERATION SHALL BE PROVIDED WITHOUT ADDITIONAL COST TO THE OWNER.

THIS TRADE SHALL DO OR HAVE DONE BY COMPETENT TRADESMEN ALL CUTTING AND PATCHING NECESSARY FOR THE INSTALLATION OF THIS WORK. NO CUTTING IN CONSTRUCTIVE PARTS OF THE BUILDING LIKELY TO IMPAIR ITS STRENGTH SHALL BE DONE WITHOUT THE ARCHITECT-ENGINEER'S WRITTEN APPROVAL.

EXCAVATION AND BACKFILL
EXCAVATION, TRENCHING AND BACKFILLING ARE SPECIFIED IN SECTION EXCAVATION TRENCHING AND BACKFILLING FOR UTILITIES. CONDUIT IS TO BE INSTALLED AS SPECIFIED FOR PIPELINES. CONDUIT INSTALLED BENEATH FLOOR SLAB SHALL BE A MINIMUM OF 6" BELOW SLAB. BACKFILL OVER CONDUIT SHALL BE COMPACTED AS FOR SLAB BEDDING MATERIAL. REFER TO STRUCTURAL DRAWINGS FOR DETAILS OF CONDUIT (PIPE) PENETRATION OF EXTERIOR FOOTINGS. COMPLETE INSTALLATION SHALL CONFORM TO N.E.C.

PENETRATIONS
COORDINATE SLEEVE SELECTION AND APPLICATION WITH SELECTION AND APPLICATION OF FIRE-STOPPING SPECIFIED IN ARCHITECTURAL SPECIFICATIONS.

ROOFS: COORDINATE ALL ROOF PENETRATIONS WITH ENGINEER, OWNER, AND AS APPLICABLE, THE ROOFING CONTRACTOR PROVIDING A ROOF WARRANTY. KEEP ALL RACEWAY PENETRATIONS WITHIN MECHANICAL EQUIPMENT CURBS WHEREVER POSSIBLE. COORDINATE WITH DIVISION 15. FLASH AND COUNTERFLASH ALL OPENINGS THROUGH ROOF, AND/OR PROVIDE PRE-FABRICATED MOLDED SEALS COMPATIBLE WITH THE ROOF CONSTRUCTION INSTALLED, OR AS REQUIRED BY THE ENGINEER, OWNER, OR ROOFING CONTRACTOR. ALL ROOF PENETRATIONS SHALL BE LEAKTIGHT AT THE TERMINATINO OF THE WORK AND SHALL NOT VOID ANY NEW OR EXISTING ROOF WARRANTIES.

WALLS AND FLOORS - SLEEVES FOR RACEWAYS AND CABLES:
STEEL PIPE SLEEVES: ASTM A 53/A 53M, TYPE E, GRADE B, SCHEDULE 40, GALVANIZED STEEL, PLAIN ENDS AND DRIP RINGS.

CAST IRON PIPE SLEEVES: CAST OR FABRICATED "WALL PIPE", EQUIVALIENT TO DUCTILE-IRON PRESSURE PIPE, WITH PLAIN ENDS AND INTEGRAL SATERSTOP, UNLESS OTHERWISE INDICATED.

FIRESTOPPING: FIRE RESISTANT THROUGH PENETRAION SEALANTS - TWO PART, FOAMED-IN-PLACE, SILICONE SEALANT FORMULATED FOR USE IN THROUGH-PENETRAION FIRE-STOPPING AROUND CABLES, RACEWAYS, AND CABLE TRAY PENETRAIONS THROUGH FIRE-RATED WALLS AND FLOORS. SEALANTS AND ACCESSORIES SHALL HAVE FIRE-RESISTANCE RATINGS INDICATED, AS ESTABLISHED BY TESTING IDENTICAL ASSEMBLIES IN ACCORDANCE WITH ASTM E 814, BY UNDERWRITER'S LABORATORIES, INC., OR OTHER NRTL ACCEPTABLE TO AHJ.
ACCEPTABLE MANUFACTURERS - HILTI, INC., 3M CORP, RECTORSEAL, SPECIFY TECHNOLOGY INC., UNITED STATES GYPSUM COMPANY.

ELECTRICAL SERVICE
SERVICE SHALL BE AS SHOWN ON DRAWINGS.

PROVIDE SECONDARY SERVICE INTO THE BUILDING WITH CONDUIT AND WIRING AS SHOWN ON THE PLANS, INCLUDING, BUT NOT LIMITED TO, UNDERGROUND RACEWAYS AND CABLES AND SECONDARY CONNECTIONS TO UTILITY TRANSFORMERS AS REQUIRED BY SERVING ELECTRICAL UTILITY COMPANY. COORDINATE ALL REQUIREMENTS WITH UTILITY COMPANY PRIOR TO BID.

PROVIDE ALL REQUIRED GROUNDING FOR A COMPLETE SERVICE ENTRANCE GROUNDING SYSTEM. PERMANENTLY AND EFFECTIVELY GROUND AND BOND THE ELECTRICAL INSTALLATION IN A THOROUGH AND EFFICIENT MANNER, AND IN CONFORMANCE (AT A MINIMUM) WITH N.E.C. OR THESE DOCUMENTS, WHERE THEY EXCEED CODE REQUIREMENTS. USE BARE OR INSULATED CONDUCTORS, AS SPECIFIED HEREIN, AND OTHER MATERIALS INDICATED ON THE DRAWINGS.

PROVIDE ALL NECESSARY ENCLOSURES REQUIRED BY THE OWNER FOR THE UTILITY COMPANY METERING. REFER TO DRAWINGS FOR MINIMUM REQUIREMENTS. COORDINATE WITH UTILITY COMPANY PRIOR TO BID FOR ALL REQUIREMENTS.

PRODUCTS

GENERAL
ALL EQUIPMENT OF A PARTICULAR KIND, SUCH AS WIRING DEVICES AND PANELBOARDS AND ALL LIGHTING FIXTURES OF THE SAME TYPE, SHALL BE THE PRODUCT OF THE SAME MANUFACTURER.

PROVIDE ACCESS PANELS FOR ALL EQUIPMENT AND DEVICES REQUIRING SUCH PANELS. SIZE AS REQUIRED FOR PROPER ACCESS AND MAINTENANCE, MINIMUM ACCEPTABLE IS 12 IN BY 12 IN CLEAR OPENING WHERE HAND ACCESS ONLY IS REQUIRED.

PROVIDE LABELS FOR EACH MOTOR CONTROLLER, SAFETY SWITCH, RELAY, PANELBOARD, CONTACTOR, TIMER, CONTROL DEVICE, METER AND CIRCUIT BREAKER. LABELS SHALL BE LAMINATED, PHENOLIC STRIPS 1/16" THICK, AND ENGRAVED TO SHOW BLACK LETTERS ON A WHITE BACKGROUND NOT LESS THAN 1/4" HIGH. SIZE STRIPS TO PROPERLY FIT MANUFACTURER'S BRACKETS AND BE LEGIBLE. WHERE MANUFACTURER'S BRACKETS ARE NOT PROVIDED, MOUNT LABELS WITH PROPER SCREWS, OR AN APPROVED ADHESIVE.

RACEWAYS
CONDUIT, RIGID STEEL; GALVANIZED OR SHERADIZED AND MANUFACTURED IN ACCORDANCE WITH ANSI STANDARD C80.L. FITTINGS SHALL BE PIPE THREADED, MALLEABLE IRON. CONNECTORS SHALL BE INSULATED THROAT TYPE.

CONDUIT, PVC: POLYVINYLCHLORIDE SCHEDULE 40 PIPE SPECIFICALLY MANUFACTURED AND LABELED (UL STANDARD 651) FOR USE AS ELECTRICAL CONDUIT. FITTINGS SHALL BE EITHER SOCKET WELDED TYPE OR PIPE THREADED WITH INSULATED THROAT.

CONDUIT, FLEXIBLE METALLIC: GALVANIZED, INTERLOCKED SPIRALLY WOUND STEEL STRIP WITH GALVANIZED OR SHERADIZED FITTINGS. LISTED PER UL-L. FITTINGS SHALL BE OF THE SQUEEZE TYPE WITH INSULATED THROATS.

CONDUIT, LIQUIDTIGHT FLEXIBLE METALLIC: GALVANIZED, INTERLOCKED SPIRALLY WOUND STEEL STRIP WITH OVERALL JACKET OF LIQUID TIGHT PVC, UL LISTED. FITTINGS SHALL BE STEEL OR MALLEABLE IRON INSULATED THROAT, WATERTIGHT.

ELECTRIC METALLIC TUBING: GALVANIZED OR SHERADIZED AND MANUFACTURED IN ACCORDANCE WITH ANSI STANDARD C80.3. FITTINGS 1/2 INCH THROUGH 2 INCH TRADE SIZE SHALL BE COMPRESSION TYPE, MANUFACTURED FROM MALLEABLE IRON OR STEEL, AND RAIN AND/OR CONCRETE-TIGHT AS REQUIRED BY INSTALLATION. POT METAL OR DIE CAST TYPE FITTINGS ARE PROHIBITED. CONNECTORS SHALL BE INSULATED THROAT TYPE.

CONDUCTORS AND CABLES
GENERAL: SERVICE LATERALS AND PANELBOARD FEEDERS SHALL BE OF ANNEALED (SOFT) COPPER COMPLYING WITH ICEA S-95-658/NEMA WC70; SOLID CONDUCTOR FOR NO. 10 AWG AND SMALLER; CONCENTRIC, COMPRESSED STRANDED FOR NO. 8 AWG AND LARGER. ALL FEEDER CONDUCTORS NO 8 AWG AND LARGER; STRANDED, TYPE THWN-2 OR XHHW-2 INSULATION.

ALL BRANCH CIRCUITS SHALL BE ANNEALED (SOFT) COPPER COMPLYING WITH ICEA S-95-658/NEMA WC70; SOLID CONDUCTOR FOR NO. 10AWG AND SMALLER; CONCENTRIC, COMPRESSED STRANDED FOR NO. 8 AWG AND LARGER. ALL BRANCH CIRCUIT CONDUCTORS NO 8 AWG AND LARGER; STRANDED, TYPE THWN-2 OR XHHW-2 INSULATION. ALL CONDUCTORS, NO 10 AWG AND SMALLER, USED FOR POWER AND LIGHTNG CIRCUITS; SOLID COPPER, TYPE THWN-2 INSULATION (WET OR DAMP LOCATIONS, OR IN CONDUIT BELOW GRADE OR SLAB), TYPE THHN INSULATION (DRY LOCATIONS ONLY ABOVE GRADE), OR DUAL RATED TYPE THHN/THWN-2. ALL BRANCH CIRCUIT WIRING SHALL NOT BE SMALLER THAN NO 12 AWG. IF NO CONDUCTOR SIZE IS INDICATED ON THE DRAWINGS FOR A BRANCH CIRCUIT, PROVIDE CONDUCTORS AND CONDUIT SIZED PER NFPA 70 AND BASED ON THE INDICATED BRANCH CIRCUIT OVERCURRENT PROTECTIVE DEVICE RATING AND NUMBER OF POLES. WHERE NO CIRCUIT SIZE (CONDUCTORS AND OVERCURRENT PROTECTIVE DEVICE) IS INDICATED ON THE DRAWINGS FOR A BRANCH CIRCUIT, PROVIDE THREE NO 12 AWG CONDUCTORS IN 3/4" RACEWAY, AND A 20A SINGLE POLE CIRCUIT BREAKER.

CONDUCTOR INSULATION TYPES; 90-DEGREE C-RATED, TYPE THHN/THWN-2 OR XHHW-2 COMPLYING WITH ICEA S-95-658/NEMA WC70.

COLORS FOR 208/120V CONDUCTORS
PHASE A: BLACK
PHASE B: RED
PHASE C: BLUE
NEUTRAL: WHITE
EQUIPMENT GROUND: GREEN
ISOLATED GROUND: GREEN WITH YELLOW STRIPE

COLORS FOR 480/277V CONDUCTORS
PHASE A: BROWN
PHASE B: ORANGE
PHASE C: YELLOW
NEUTRAL: WHITE
EQUIPMENT GROUND: GREEN

UNLESS NOTED OTHERWISE, SPECIAL PURPOSE CONDUCTORS AND CABLES, SUCH AS LOW VOLTAGE CONTROL AND SHIELDED INSTRUMENT WIRING, SHALL BE AS RECOMMENDED BY THE SYSTEM EQUIPMENT MANUFACTURER.

CONTROL WIRING; STRANDED COPPER CONDUCTORS, 600V INSULATION, OF THE PROPER TYPE, SIZE AND NUMBER AS REQUIRED TO ACCOMPLISH SPECIFIED FUNCTION. MINIMUM SIZE; NO. 14 AWG UNLESS NOTED OTHERWISE.

MC TYPE CABLE CAN BE USED IF ACCEPTED BY LOCAL AUTHORITY AND GOVERNING CODES FOR WHIPS FROM JUNCTION BOX TO LIGHT FIXTURES ONLY. TYPE MC CABLE; 600V, UNJACKETED; ANSI E119 AND E814, UL STANDARDS 44 OR 83 (AS APPLICABLE), AND 1569, NFPA 70 ARTICLE 330; ALUMINUM OR GALVANIZED STEEL INTERLOCKED ARMOR; THHN- OR XHHW-INSULATED CONDUCTORS; COLOR CODE; ICEA METHOD 1, WITH GREEN INSULATED GROUDING CONDUCTOR.

PROVIDE A DEDICATED EQUIPMENT-GROUNDING CONDUCTOR, OR BONDING JUMPER, AS APPLICABLE, IN ALL BRANCH CIRCUITS AND FEEDERS, SIZED IN ACCORDANCE WITH NFPA 70, UNLESS INDICATED AS LARGER ON THE DRAWINGS.

PROVIDE A DEDICATED NEUTRAL (WHERE REQUIRED) AND DEDICATED GROUNDING CONDUCTOR FOR EACH BRANCH CIRCUIT.

VOLTAGE DROP IN BRANCH CIRCUITS SHALL NOT EXCEED 2%.

GFCI CIRCUITS: DO NOT USE MULTI-CONDUCTOR CIRCUITS, WITH A SHARED NEUTRAL FOR ANY GFCI CIRCUIT BREAKER OR RECEPTACLE CIRCUIT. BRANCH CIRCUITS FED FROM GFCI CIRCUIT BREAKERS, LIMIT THE ONE-WAY CONDUCTOR LENGTH TO 100 FEET BETWEEN THE PANELBOARD AND THE MOST REMOTE RECEPTACLE OR LOAD ON THE GFCI CIRCUIT.

BOXES
OUTLET BOXES: GALVANIZED PRESSED STEEL WITH GALVANIZED STEEL EXTENSION RINGS OR PLASTER RINGS OR TILE RINGS TO PROVIDE EXPOSED SURFACE FLUSH WITH WALL OR CEILING FINISH. PROVIDE ALL CEILING OUTLET BOXES WITH "NO-BOLT" OR THROUGH AND LOCKNUTTED TYPE FIXTURE STUDS.

JUNCTION AND PULL BOXES: FABRICATE IN ACCORDANCE WITH NEMA AND N.E.C. STANDARDS AND REQUIREMENTS INSOFAR AS MATERIAL, GAUGES, DIMENSIONS, AND FABRICATION METHODS. BOXES SHALL BEAR THE UL LABEL. WHERE BOXES ARE NOT SIZED ON THE DRAWINGS, THEY SHALL BE SIZED IN ACCORDANCE WITH N.E.C. REQUIREMENTS. FINISH IN STANDARD GRAY ENAMEL, WITH SIDES AND BACK SPOT-WELDED IN POSITION AND THE REMOVABLE SCREW COVER MOUNTED WITH BRASS MACHINE SCREWS.

WIRING DEVICES
SWITCHES: HEAVY DUTY AC, RATED 20 AMPERES, 120/277 VOLTS, SINGLE-POLE, DOUBLE-POLE, THREE-POLE, OR FOUR-WAY AS NOTED ON DRAWINGS OR AS REQUIRED FOR THE SWITCHING ARRANGEMENTS IN EACH SPACE. HUBBELL #HBL122** OR EQUAL. COORDINATE SWITCH COLORS WITH COVERPLATES AS DESCRIBED BELOW UNDER "PLATES".

SWITCHES, SPECIAL PURPOSE: KEY OPERATED, HEAVY-DUTY AC, RATED 20 AMPERES, 120/277 VOLTS, SINGLE OR MULTI-POLE AS NOTED OR AS REQUIRED. HUBBELL #HBL122** OR EQUAL.

RECEPTACLES: THREE WIRE GROUNDING TYPE, 120 VOLT RATED, SPECIFICATION GRADE 20 AMPERES DUPLEX UNLESS NOTED OTHERWISE ON DRAWINGS. HUBBELL #5362 OR EQUAL. COORDINATE RECEPTACLE COLOR WITH COVERPLATE AS DESCRIBED BELOW UNDER "PLATES". SINGLE RECEPTACLE, 20 AMPERE, 120 VOLT, SPECIFICATION GRADE. HUBBELL #5361 OR EQUAL.

DUST AND MOISTURE RESISTANT, MELAMINE BODY, GRAY NYLON FACE BACKED BY FABRIC REINFORCED NEOPRENE GASKET SLIT TO PROVIDE WIPING ACTION ON CAP BLADES. PASS & SEYMOUR #6307 OR APPROVED EQUAL. GROUND FAULT CIRCUIT INTERRUPTER, NYLON FACE CLASS A, NEMA 5-20R, SPECIFICATION GRADE. HUBBELL #GF-5362* OR EQUAL.

CORROSION RESISTANT, SIMILAR AND APPROVED EQUAL TO STANDARD RECEPTACLE, EXCEPT FABRICATED FROM YELLOW MELAMINE PLASTIC WITH YELLOW NYLON FACE AND EXPOSED METAL PARTS FINISHED TO RESIST CORROSION. (NEMA 5-15R = HUBBELL #52CM61).

ISOLATED GROUND, DUPLEX OR SIMPLEX THREE WIRE GROUNDING TYPE, SPECIFICATION GRADE, ORANGE FACE, GROUND CONTACT FULLY ISOLATED FROM STRAP AND EQUIPPED WITH SCREW TERMINAL. HUBBELL #IG-5362* OR EQUAL.

RECEPTACLES, SPECIAL PURPOSE: SPECIAL PURPOSE OUTLETS SHALL BE AS SCHEDULED ON DRAWINGS.

PLATES: PROVIDE PLATES FOR ALL OUTLET BOXES. PLATES SHALL BE OF SUITABLE CONFIGURATION FOR THE NUMBER AND TYPE OF DEVICES SERVED, SHALL BE ONE PIECE, SHALL OVERLAP OUTLET BOX EDGE AND ROOM SURFACES, AND SHALL BE SMOOTH FINISH NYLON TYPE OF SAME MANUFACTURER AS THE WIRING DEVICES. VERIFY DESIRED MATERIALS AND COLORS WITH ARCHITECT PRIOR TO INSTALLATION.

STANDARD INTERIOR: IVORY FINISHED ON LIGHT COLORED WALLS - COORDINATE ALL COLORS WITH ARCHITECT

INTERIOR DAMP LOCATIONS: STAINLESS STEEL.

EXTERIOR LOCATIONS: FOR UNATTENDED WET LOCATIONS, PROVIDE IN-USE NEMA 3R, UL LABELED PLATES MOLDED FROM A CLEAR HIGH IMPACT ULTRAVIOLET STABILIZED POLYCARBONATE MATERIAL FOR EASY VERIFICATION THAT CORDS ARE PLUGGED IN AND THAT THE GFCI IS FUNCTIONING. COVER PLATES SHALL BE BY THE SAME MANUFACTURER AS THE WIRING DEVICES; COMPLYING WITH NFPA 70 406.8 (A) OR (B) REQUIREMENTS FOR ATTENDED OR UNATTENDED USE AS APPLICABLE.

ACCEPTABLE MANUFACTURERS: HUBBELL, PASS & SEYMOUR, LEVITON AND COOPER.

CABINETS AND ENCLOSURES
FURNISH AND INSTALL FLUSH CABINETS AND ENCLOSURES AS SHOWN ON THE PLANS AND AS HEREIN SPECIFIED. UNIT SHALL BE PROVIDED WITH DEAD FRONT SUB PANEL, RECESSED AS REQUIRED, TO HOUSE CONTROLS. DOOR SHALL BE PROVIDED WITH CONCEALED HINGES AND FLUSH KEY OPERATED LOCK. DOOR AND TRIM SHALL BE PRIME PAINTED FOR FIELD PAINTING TO MATCH WALL FINISHES. PROVIDE KNOCK-OUTS, LOUVERS AND IDENTIFICATION ENGRAVING AS REQUIRED TO MEET FIELD CONDITIONS. EXACT BACKBOX SIZE TO BE COORDINATED WITH EQUIPMENT SUPPLIER.

CIRCUIT DISCONNECTS
SAFETY SWITCHES: SAFETY SWITCHES SHALL CONSIST OF A BOX, FRONT COVER, AND CIRCUIT PROTECTOR DEVICE ALL MANUFACTURED AND ASSEMBLED IN ACCORDANCE WITH NEMA STANDARDS

THE BOX SHALL BE FABRICATED FROM CODE GAUGE GALVANIZED SHEET STEEL IN ACCORDANCE WITH U.L. LISTING AND LABEL. THE CIRCUIT PROTECTOR DEVICE SHALL BE HEAVY DUTY, QUICK-MAKE, QUICK-BREAK FUSED OR UNFUSED SWITCH RATED FOR MOTOR CIRCUITS AND/OR SERVICE ENTRANCE DUTY, IF REQUIRED. UNITS SHALL BE FURNISHED FOR SURFACE OR FLUSH MOUNTING WITH EITHER GENERAL PURPOSE OR RAINTIGHT ENCLOSURES, AS REQUIRED. FUSED UNITS SHALL BE FURNISHED COMPLETE WITH PROPER FUSES.

PANELBOARDS
SHALL CONSIST OF BOX, INTERIOR, FRONT, AND CIRCUIT PROTECTIVE DEVICES. THE ASSEMBLY SHALL BE U.L. LABELED AND BE LISTED FOR SERVICE. THE ASSEMBLY SHALL BE DESIGNED AND MANUFACTURED IN ACCORDANCE WITH NEMA STANDARD PB-1. THE LATEST UL STANDARD (UL-50) AND SHALL HAVE A TURNED EDGE AROUND THE FRONT FOR RIGIDITY AND FOR CLAMPING ON FRONT. PROVIDE STANDARD KNOCKOUTS ON REMOVABLE BOX ENDS. FABRICATE FROM SHEET STEEL AND FINISH WITH BAKED ON GRAY ENAMEL OVER RUST INHIBITOR. EACH FRONT SHALL HAVE A DOOR MOUNTED ON SEMI-CONCEALED HINGES WITH A CYLINDER LOCK, INDEX CARD CIRCUIT DIRECTORY MOUNTED BEHIND CLEAR PLASTIC AND HELD IN A METAL FRAME, AND CONCEALED TRIM CLAMPS FOR MOUNTING TO THE BOX. ALL LOCKS SHALL BE MASTER KEYED AND ALL PANEL DIRECTORIES SHALL BE TYPEWRITTEN.

ALL INTERIORS SHALL BE COMPLETELY FACTORY ASSEMBLED. THE DESIGN OF THE INTERIOR SHALL PERMIT REPLACEMENT OF INDIVIDUAL BRANCH BREAKERS WITHOUT DISTURBING ADJACENT UNITS AND WITHOUT MACHINE DRILLING OR TAPPING. BUS BARS FOR PANELS RATED 600 AMPERES OR MORE SHALL BE TIN PLATED 98% CONDUCTIVITY COPPER OR TIN FINISH ALUMINUM (57% CONDUCTIVITY) OF RECTANGULAR CROSS-SECTION. BUS BARS FOR PANELS RATED LESS THAN 600 AMPERES SHALL BE TIN PLATED 98% CONDUCTIVITY COPPER OF RECTANGULAR CROSS-SECTION. BUS BAR CONNECTIONS TO BRANCH CIRCUIT BREAKERS SHALL BE THE PHASE SEQUENCE TYPE AND ACCEPT BOLT-ON TYPE BREAKERS ONLY. PANELBOARD BUS STRUCTURE AND MAIN BREAKER OR MAIN LUGS SHALL BE RATED AS SCHEDULED ON DRAWING. SUCH RATINGS SHALL BE ESTABLISHED BASED ON HEAT RISE TESTS IN ACCORDANCE WITH UL STANDARDS. GROUP INCOMING CABLE LUGS AT ONE END FOR SEPARATION FROM LOAD SIDE CABLES. EQUIPMENT NEUTRAL BUSSING WITH A LUG FOR EACH BRANCH BREAKER POSITION. INTERIOR SHALL MOUNT TO BOX WITHOUT TOOLS.

BREAKERS SHALL BE QUICK-MAKE, QUICK-BREAK, BOLT-ON THERMAL-MAGNETIC MOLDED CASE CIRCUIT BREAKERS ONE, TWO OR THREE POLE WITH INTEGRAL CROSSBAR FOR MULTI-POLE UNITS, EQUIPPED WITH AN OVERCENTER, TRIP-FREE, TOGGLE-TYPE OPERATING ACTION AND POSITIVE HANDLE INDICATION OF BREAKER STATUS. CIRCUIT BREAKERS SHALL BE UL LISTED IN ACCORDANCE WITH UL STANDARDS.

EACH PANELBOARD, AS A COMPLETE UNIT, SHALL HAVE A SHORT CIRCUIT RATING EQUAL TO OR GREATER THAN THE INTEGRATED EQUIPMENT RATING SHOWN ON DRAWINGS. THE RATING SHALL BE ESTABLISHED BY TESTING WITH THE OVERCURRENT DEVICES MOUNTED IN THE PANELBOARD. THE SHORT CIRCUIT TESTS ON THE OVERCURRENT DEVICES ON THE STRUCTURE SHALL BE MADE SIMULTANEOUSLY BY CONNECTING THE FAULT TO EACH OVERCURRENT DEVICE WITH THE PANELBOARD CONNECTED TO ITS RATED SUPPLY VOLTAGE.

REFER TO PANELBOARD SCHEDULES FOR FULLY RATED OR SERIES-RATED REQUIREMENTS. SERIES-RATED SYSTEMS ARE NOT ALLOWED UNLESS SPECIFICALLY INDICATED ON PANELBOARD SCHEDULES. WHERE ALLOWED, SERIES-RATED SYSTEMS SHALL BE PROPERLY LABELLED BY NEC REQUIREMENTS.

METHOD OF TESTING SHALL BE PER UL STANDARDS. PANELBOARDS SHALL BE MARKED WITH THEIR MAXIMUM SHORT CIRCUIT CURRENT RATING AT THE SUPPLY VOLTAGE.

APPROVED MANUFACTURERS: SQUARE-D CO. OR EQUAL BY GE, SIEMENS AND/OR EATON.

OVERCURRENT PROTECTIVE DEVICES
FUSES OF THE PROPER SIZE, RATING AND ELECTRICAL CHARACTERISTICS SHALL BE PROVIDED IN EACH FUSIBLE DEVICE. FUSES OF 600 VOLTS AND BELOW SHALL BE UL CLASS RK-1, CURRENT-LIMITING, TIME-DELAY, DUAL-ELEMENT, 200,000 AMPERE RMS SYMMETRICAL INTERRUPTING CAPACITY ON NON-MOTOR CIRCUITS AND UL CLASS RK-5, TIME-DELAY, DUAL-ELEMENT, 200,000 AMPERES RMS SYMMETRICAL INTERRUPTING CAPACITY ON MOTOR CIRCUITS.

APPROVED MANUFACTURERS: BUSSMANN, LITTLEFUSE OR FERRAZ-SHAWMUT (ALL FUSES SHALL BE OF SAME MANUFACTURER TO ENSURE SELECTIVE COORDINATION).

CIRCUIT BREAKERS: CIRCUIT BREAKERS OF THE PROPER SIZE, RATING, AND ELECTRICAL CHARACTERISTICS SHALL BE PROVIDED WHERE CALLED FOR ON DRAWINGS. BREAKERS SHALL BE THERMAL MAGNETIC MOLDED-CASE WITH QUICK-MAKE, QUICK-BREAK, OVER CENTER TOGGLE TYPE MECHANISM AND TRIP-FREE HANDLE MECHANISM. THE BREAKER SHALL BE ENCLOSED IN A SUITABLE NEMA RATED ENCLOSURE. BREAKERS SHALL BE OF SAME MANUFACTURER AS THOSE IN THE PANELBOARDS.

TIMESWITCHES
ELECTRONIC TIME SWITCHES: ELECTRONIC, SOLID STATE PROGRAMMABLE UNITS WITH ALPHANUMERIC DISPLAY; COMPLYING WITH UL917. SPST, 30 AMPERE INDUCTIVE OR RESISTIVE, 240VAC, CONTACT RATING. 2 PROGRAMMABLE ON-OFF SET POINTS ON A 24-HOUR SCHEDULE, ALLOWING DIFFERENT SET POINTS FOR EACH DAY OF THE WEEK. ALLOW CONNECTION OF A PHOTOELECTRIC RELAY AS SUBSTITUE FOR ON-OFF FUNCTION OF A PROGRAM. ASTRONOMIC TIME ON ALL CHANNELS. BATTERY BACKUP FOR SCHEDULES AND TIME CLOCK.

OUTDOOR PHOTOELECTRIC SWITCHES
SOLID STATE, WITH SPST DRY CONTACT RATED FOR 1800-VA TUNGSTEN OR 1000-VA INDUCTIVE, TO OPERATE CONNECTED RELAY, CONTACTOR COILS OR MICROPROCESSOR INPUT, COMPLYING WITH UL 773A.

TELEPHONE AND DATA SYSTEMS
FURNISH AND INSTALL A SYSTEM OF PROPERLY SIZED AND PROPERLY LOCATED OUTLETS WITH ASSOCIATED CONNECTING CONDUIT RUNS, EXTENDING TO PULL BOXES AND TELEPHONE BACKBOARD. FURNISH AND INSTALL RACEWAYS, FOR INCOMING SERVICE WHERE INDICATED.
OUTLET BOXES: UNLESS OTHERWISE INDICATED, ALL TELEPHONE OUTLETS AND JUNCTION BOXES SHALL BE PROVIDED AS REQUIRED TO ACCOMMODATE INTERNAL TERMINAL STRIPS BY TELEPHONE CO.

OUTLET COVER PLATES: TELEPHONE OUTLET COVER PLATES SHALL MATCH THOSE SPECIFIED FOR ADJACENT WIRING DEVICES, INCLUDING THOSE WITH SPECIAL FINISHES.

RACEWAYS: MATERIALS FOR TELEPHONE RACEWAY SYSTEM WORK SHALL BE IN ACCORDANCE WITH CORRESPONDING RACEWAYS SPECIFIED HEREIN AND IN OTHER SECTIONS.

VERIFY LOCATION OF WALL OUTLETS BEFORE ROUGHING IN TO ENSURE COORDINATION WITH OWNER'S FINAL INTENDED FURNITURE LAYOUT. PLAN INDICATIONS SHALL NOT BE SCALED UNLESS DIRECTED. OUTLETS SHALL BE RELOCATED WITHIN ROOMS BEFORE ROUGH-IN WHERE DIRECTED BY ARCHITECT-ENGINEER WITHOUT ADDITIONAL COST TO OWNER.

TELEPHONE SERVICE CONDUIT LAYOUT SHALL HAVE THE JOB SITE APPROVAL OF AN AUTHORIZED REPRESENTATIVE OF THE TELEPHONE CO. COORDINATE WORK SO THAT BOTH TELEPHONE CO. AND OWNER'S REPRESENTATIVES ARE PRESENT AT THE SAME TIME FOR APPROVAL OR CHANGES IN AMPLE TIME FOR ANY REQUIRED CORRECTIONS BEFORE COMPLETION OF PROJECT.

FROM EACH TELEPHONE OUTLET, PROVIDE 3/4" EMT CONDUIT CONCEALED IN WALL TO 6" ABOVE ACCESSIBLE CEILING OR UP TO STRUCTURE WHERE NO CEILING EXISTS, UNLESS SHOWN OTHERWISE ON DRAWINGS.

TELEPHONE TERMINAL BOARD: PRIOR TO INSTALLATION OF TELEPHONE TERMINAL BOARD, THE EXACT LOCATION SHALL BE VERIFIED WITH THE TELEPHONE CO. THE TELEPHONE TERMINAL BOARD SHALL BE PROVIDED WITH A DOUBLE DUPLEX RECEPTACLE LOCATED WHERE INDICATED ON THE DRAWINGS. THE TERMINAL BOARD SHALL BE CONSTRUCTED OF 4' X 8' X 3/4" PLYWOOD WITH TWO (2) COATS OF FLAME RETARDANT PAINT UNLESS NOTED OTHERWISE ON DRAWINGS.

LIGHTING
FIXTURES ARE SPECIFIED IN THE SCHEDULE BY MANUFACTURER'S NAME AND CATALOG NUMBER.

ALL RECESSED LIGHT FIXTURES SHALL BE PROVIDED WITH FACTORY INSTALLED THERMAL PROTECTION.

ALL LAMPS USED ON THIS PROJECT SHALL BE NEW, DELIVERED TO THE JOB SITE IN THE ORIGINAL PACKING CASES AND SLEEVES AND SHALL BE OF THE SAME MANUFACTURER.

PROVIDE FLUORESCENT FIXTURES WITH ELECTRONIC BALLASTS SUITABLE FOR OPERATION OF LAMPS SPECIFIED; TOTAL HARMONIC DISTORTION LESS THAN 20%; FREQUENCY OF OPERATION OF 20 KHZ OR GREATER WITH NO VISIBLE FLICKER; LINE TRANSIENT WITHSTAND RATINGS AS DEFINED IN ANSI/IEEE, CATEGORY A. APPROVED MANUFACTUERERS: ADVANCE OR EQUAL BY MAGNETEK, MOTOROLA OR OSRAM.

HID BALLASTS SHALL BE AUTO TRANSFORMER REACTOR, HIGH POWER FACTOR POTTED AND ENCASED TO MINIMIZE SOUND. APPROVED MANUFACTURERS: GE, SYLVANIA, OR OSRAM.

LED LIGHT FIXTURES ARE TO BE PROVIDED WITH COMPATIBLE DRIVER AND MUST BE COORDINATED WITH CONTROL TYPE INDICATED. CONTRACTOR IS RESPONSIBLE TO ENSURE CONTROLS ARE CAPABLE OF PROPERLY CONTROLLING LIGHT FIXTURES AS INDICATED WITHIN THESE DRAWINGS.

CONTACTORS AND RELAYS
ALL CONTACTORS AND RELAYS SHALL BE UL LISTED AND LABELED, GENERAL PURPOSE, ELECTRICALLY HELD TYPE, IN NEMA 1 ENCLOSURES. WHERE SPECIFICALLY NOTED ON DRAWINGS, UNITS SHALL BE ELECTRICALLY HELD OR MOMENTARY OPERATIONAL TYPE. UNITS SHALL BE FURNISHED WITH LINE OR LOW VOLTAGE CONTROL AS NOTED AND WITH THE CORRECT NUMBER OF POLES AND CURRENT CHARACTERISTICS. WHERE LOW VOLTAGE OPERATION IS INDICATED, PROVIDE PROPER STEPDOWN TRANSFORMERS AND RECTIFIERS. APPROVED MANUFACTURERS: ASCO, OR MANUFACTURER OF APPROVED PANELBOARDS FURNISHED.

TRANSFORMERS
GENERAL PURPOSE, UL-LISTED/LABELED 150 DEGREES C TEMPERATURE RISE ABOVE 40 DEGREES C AMBIENT. INSULATING MATERIALS: EXCEED NEMA ST-020 STANDARDS, RATED FOR 220 DEGREES C, UL-COMPONENT RECOGNIZED INSULATION SYSTEM. PHASES, VOLTAGES, AND SIZES: AS INDICATED ON THE DRAWINGS. SOUND LEVEL: NOT EXCEEDING NEMA STANDARDS FOR THE SIZES INDICATED. FULL-CAPACITY PRIMARY TAPS: BELOW 25 KVA - MINIMUM OF TWO 5% (2-); 25 KVA TO 300 KVA - MINIMUM OF SIX 2.5% (2+, 4-); ABOVE 300 KVA - FOUR 2.5% (2+, 2-). TRANSFORMER CORE AND COIL ASSEMBLIES: MOUNTED ON INTEGRAL VIBRATION-ABSORBING PADS. MAKE FINAL CONDUIT CONNECTIONS TO TRANSFORMERS WITH FLEXIBLE CONDUIT, WITH AT LEAST 6" OF SLACK IN ALL DIRECTIONS. TRANSFORMER ENCLOSURES: FULLY ENCLOSED (EXCEPT FOR VENTILATION OPENINGS), NEMA 2, DRIP-PROOF, FABRICATED OF HEAVY GAUGE SHEET STEEL CONSTRUCTION. MANUFACTURERS: SQUARE D, GENERAL ELECTRIC, ACME, SIEMENS.

ARCHITECT
B+A ARCHITECTURE, LLC
600 BROADWAY BLVD, SUITE 290
KANSAS CITY, MO 64105
PH: 816-753-6100

MEP ENGINEER
ENGINEERING BUILDING SOLUTIONS
ADDRESS 1
CITY, STATE ZIP
PH: 913-735-5654

PARKVILLE BOBA TEA SHOP
CREEKSIDE COMMONS, PARKVILLE, MO

SEAL

NOT FOR CONSTRUCTION

ISSUED: MARCH 23, 2023

NO.	REVISION	DATE

DESIGNED BY TT
DRAWN BY LH
CHECKED BY HBD

THIS DRAWING IS THE PROPERTY OF B+A ARCHITECTURE AND IS NOT TO BE REPRODUCED OR COPIED IN WHOLE OR IN PART. IT IS ONLY TO BE USED FOR THE PROJECT AND SITE SPECIFICALLY IDENTIFIED HEREIN AND IS NOT TO BE USED ON ANY OTHER PROJECT.

SCALES AS STATED HEREIN ARE VALID ON THE ORIGINAL DRAWING ONLY. CONTRACTOR SHALL CAREFULLY REVIEW ALL DIMENSIONS AND CONDITIONS SHOWN HEREIN AND AT ONCE REPORT TO THE ARCHITECT ANY ERROR INCONSISTENCY OR OMISSION DISCOVERED.

E501

WIRING OF MECHANICAL EQUIPMENT
PROVIDE ALL RACEWAYS AND POWER WIRING FOR ALL DIVISION 15 EQUIPMENT REQUIRING ELECTRICAL CONNECTIONS, INCLUDING, BUT NOT LIMITED TO, PUMPS, WATER HEATERS, AND HVAC EQUIPMENT, AND ALL LINE-VOLTAGE CONTROL AND INTERLOCK WIRING NOT PROVIDED UNDER DIVISION 15. CONNECT PER MANUFACTURER'S WIRING DIAGRAMS. COORDINATE WITH DIVISION 15 FOR DISCONNECTS FURNISHED WITH EQUIPMENT, AND PROVIDE ALL DISCONNECT SWITCHES AS REQUIRED. AFTER INSTALLING WIRING, VERIFY THAT EACH MOTOR LOAD HAS THE CORRECT PHASE ROTATION.

VERIFY THE ACTUAL "MAXIMUM OVERCURRENT PROTECTION" DEVICE RATINGS AND "MINIMUM CIRCUIT AMPACITY" CONDUCTOR SIZING FOR MECHANICAL EQUIPMENT FROM THE EQUIPMENT NAMEPLATE. BASE ELECTRICAL INSTALLATIONS ON ACTUAL REQUIRED AMPERAGES, WHICH MAY VARY SOMEWHAT FROM THE CONDUCTOR AND EQUIPMENT SIZES SHOWN ON THE DRAWINGS; HOWEVER, IN NO CASE, REDUCE THE SIZE OF CONDUCTORS INDICATED ON THE DRAWINGS WITHOUT AUTHORIZATION FROM THE ENGINEER. PROVIDE PROPERLY SIZED ELECTRICAL WIRING AND EQUIPMENT WITHOUT EXTRA COST TO THE OWNER. NOTIFY THE ENGINEER OF ALL CHANGES REQUIRED IN THE ELECTRICAL INSTALLATION DUE TO EQUIPMENT VARIANCES SO THAT THE EFFECTS ON FEEDERS, BRANCH CIRCUITS, PANELBOARDS, FUSES AND CIRCUIT BREAKERS CAN BE CHECKED PRIOR TO PURCHASING AND INSTALLATION. BE RESPONSIBLE FOR COORDINATING WITH DIVISION 15 TO VERIFY THE ACTUAL AMPACITIES AND CORRECT SIZES OF ALL CONDUCTORS AND OVERCURRENT PROTECTIVE DEVICES FOR ALL EQUIPMENT, AND CORRECT OVERLOAD HEATERS FOR ALL MOTORS, WHEN STARTERS ARE PROVIDED UNDER DIVISION 16.

PROVIDE ALL RACEWAYS, POWER WIRING, AND LINE-VOLTAGE CONTROL AND INTERLOCK WIRING NOT PROVIDED UNDER DIVISION 15, FOR ALL THERMOSTATS, TEMPERATURE CONTROL DEVICES, AND CONTROLS, INCLUDING, BUT NOT LIMITED TO, NIGHT-STATS, WATER HEATER INTERLOCKS, TIME SWITCHES AND OVERRIDE TIMERS. SEE MECHANICAL DRAWINGS FOR LOCATIONS AND TEMPERATURE CONTROL DIAGRAMS. LOW-VOLTAGE CONDUCTORS FOR THERMOSTATS AND TEMPERATURE CONTROL SYSTEMS MAY BE RUN EXPOSED ABOVE FINISHED ACCESSIBLE CEILINGS, IF APPROVED AND LISTED FOR THIS PURPOSE, BUT SHALL BE INSTALLED IN CONDUIT WITHIN WALLS AND WHERE EXPOSED IN THE WORK AREAS.

EXECUTION

METHOD OF PROCEDURE
ERECT EQUIPMENT PARTS AT SUCH TIME AND IN SUCH MANNER AS TO MINIMIZE INTERFERENCES AND DELAYS IN THE EXECUTION OF THE WORK CARE SHALL BE USED IN THE ERECTION AND INSTALLATION OF ALL EQUIPMENT AND MATERIALS TO AVOID MARRING SURFACES OF THE WORK. DAMAGES SHALL BE REPAIRED AT NO ADDITIONAL COST TO THE OWNER.

EQUIPMENT REQUIRING ELECTRICAL SERVICE SHALL NOT BE ENERGIZED OR PLACED IN SERVICE UNTIL ALL INTERESTED PARTIES HAVE BEEN DULY NOTIFIED AND ARE PRESENT OR HAVE WAIVED THEIR RIGHT TO BE PRESENT. WHERE EQUIPMENT TO BE PLACED IN SERVICE INVOLVES SERVICE OR CONNECTION FROM ANOTHER CONTRACTOR OR THE OWNER, NOTIFY THE OWNER IN WRITING WHEN THE EQUIPMENT WILL BE READY. THE OWNER SHALL BE NOTIFIED AS FAR IN ADVANCE AS POSSIBLE, OF THE DATE THE VARIOUS ITEMS OF EQUIPMENT WILL BE COMPLETE.

THE WORK OF THIS TRADE INCLUDES ROUGH-IN FOR AND FINAL CONNECTION AND REQUIRED TO ALL MISCELLANEOUS EQUIPMENT FURNISHED BY OTHERS, OR UNDER OTHER DIVISIONS OF THE WORK. THIS SHALL INCLUDE POWER AND CONTROL WIRING. WIRING DEVICES AND COVER-PLATES FOR BUILT-IN EQUIPMENT ARE INCLUDED IN THE WORK OF THIS DIVISION. SAFETY DISCONNECTS AND OTHER MISCELLANEOUS PROTECTIVE DEVICES REQUIRED BY N.E.C. ARE INCLUDED IN THE WORK OF THIS DIVISION. DO ALL ROUGHING-IN AND FINAL CONNECTIONS FROM APPROVED SHOP DRAWINGS ONLY.

COMPLIANCE WITH THE DRAWING AND ANY NOTES THEREON IS REQUIRED. PROVIDE OPENINGS THROUGH WALLS, PARTITIONS, FLOORS, AND ROOFS AS REQUIRED FOR ELECTRICAL WORK.

PROVIDE SLEEVES FOR ELECTRICAL WORK PASSING THROUGH WALLS, PARTITIONS, ROOFS, AND FLOORS. SLEEVES SHALL EXTEND THROUGH FLOORS, WALLS AND PARTITIONS AND SHALL BE CUT FLUSH WITH EACH SURFACE UNLESS OTHERWISE SPECIFIED. FIRE WALL AND/OR FLOOR INTEGRITY SHALL BE RESTORED AFTER PENETRATION. SLEEVES IN CONCRETE AND MASONRY WALLS, CONCRETE FLOORS AND ROOFS, SHALL BE FABRICATED FROM STANDARD GALVANIZED STEEL PIPE WITH ENDS FINISHED SMOOTH, BURR FREE, WITHOUT SHARP EDGES. SLEEVES IN WALLS, ROOFS, AND FLOORS OF OTHER CONSTRUCTION AND THROUGH SUSPENDED CEILINGS SHALL BE FABRICATED FROM 22 U.S. GAUGE GALVANIZED STEEL. FLOOR SLEEVES SHALL EXTEND THREE INCHES ABOVE FINISHED FLOOR UNLESS OTHERWISE NOTED. SPACE BETWEEN FLOOR SLEEVES AND PASSING CONDUIT SHALL BE FILLED WITH DUCT SEAL PACKING AND CAULKED WITH WATERPROOF COMPOUND AS APPROVED. WHERE CONDUITS PASS THROUGH WATERPROOFED FLOORS OR WALLS, SLEEVES SHALL BE FABRICATED SUCH THAT WATERPROOFING CAN BE FLASHED ONTO AND AROUND THE SLEEVE.

RACEWAYS
ALL POWER AND LIGHTING CIRCUITS SHALL BE RUN IN METALLIC RACEWAYS EXCEPT WHERE SPECIFICALLY NOTED OTHERWISE. THESE RACEWAYS SHALL BE RUN CONCEALED IN ALL FINISHED AREAS, AND WHERE RUN EXPOSED SHALL BE SQUARE TO THE BUILDING AND HELD TIGHT TO THE BUILDING CONSTRUCTION. LOW VOLTAGE, TELEPHONE, INTERCOM, MUSIC, ALARM AND SECURITY WIRING RUN ABOVE ACCESSIBLE CEILINGS SHALL BE RUN USING INSULATED, PLENUM RATED CABLE. PROVIDE LOW VOLTAGE CABLE IN CONDUIT IF REQUIRED BY LOCAL AHJ. VERIFY ALL REQUIREMENTS PRIOR TO INSTALLATION. METALLIC CONDUIT FOR THESE SYSTEMS SHALL BE PROVIDED ONLY WHERE RUN INSIDE WALLS. THE DRAWINGS INDICATE THE REQUIRED SIZE OF ALL RACEWAYS (EXCEPT AS HEREINAFTER SPECIFIED), THE POINTS OF TERMINATION AND THE SUGGESTED ROUTING. HOWEVER, THE INSTALLER IS RESPONSIBLE FOR PROPER COORDINATION WITH BUILDING STRUCTURE AND THE WORK OF OTHER TRADES. FURNISH ALL REQUIRED BENDS, ELBOWS, FITTINGS, JUNCTION AND PULL BOXES, WHETHER OR NOT SPECIFICALLY SHOWN ON DRAWINGS, THAT MAY BE REQUIRED TO SATISFY CODES AND THE STANDARDS OF GOOD PRACTICE. WHERE CONDUITS FOR BOTH BRANCH AND FEEDER CIRCUITS ARE RUN CONCEALED, THEY MAY BE RUN OUT OF SQUARE TO THE BUILDING PROVIDING THE SHORTEST POSSIBLE RUN IS UTILIZED. RACEWAY SIZES ARE BASED ON THE USE OF COPPER CONDUCTORS AND N.E.C. FILL.

CONDUIT SHALL BE CONSTRUED AS ELECTRICAL RACEWAYS AND SHALL CONFORM TO THE FOLLOWING: CONCEALED IN SUSPENDED CEILINGS AND INTERIOR PARTITIONS - EMT WITH SET SCREW TYPE FITTINGS. UNDERGROUND OR BELOW INTERIOR SLABS - GRS. (NOTE: PVC CONDUIT IS PERMITTED OUTSIDE FOR PARKING AREA LIGHTING, SIGNS, ETC. ELBOWS SHALL BE GRS). EXPOSED ON BUILDING EXTERIOR - GRS.

CONDUIT BENDS SHALL BE MADE TO THE LARGEST POSSIBLE RADIUS FOR EASE IN PULLING CONDUCTORS AND TO PROVIDE A NEATLY INSTALLED APPEARANCE. EQUIPMENT AND CONDITIONS PERMITTING, POWER CONDUIT BENDS SHALL CONFORM TO THE FOLLOWING: 1-1/2 IN. - 18 IN. RADIUS; 2 IN. - 24 IN. RADIUS; 2-1/2 IN. - 24 IN. RADIUS; 3 IN. - 36 IN. RADIUS.

GRS CONDUIT SHALL BE CUT WITH POWER OR HACKSAW AND CLEANLY REAMED TO REMOVE ALL "BURRS" AND ALL FIELD CUT THREADS SHALL BE PAINTED WITH WHITE LEAD BEFORE COUPLINGS ARE APPLIED.

EMPTY CONDUIT SYSTEMS INSTALLED FOR COMMUNICATION SYSTEMS, PUBLIC TELEPHONES, OWNER ITEMS AND OTHER SYSTEMS AS INDICATED ON DRAWINGS SHALL BE INSTALLED COMPLETE WITH NYLON PULL WIRES PROPERLY TAGGED AT BOTH ENDS FOR IDENTIFICATION.

WHERE BUILDING VENTILATION CONDITIONS ARE SUCH THAT AIR MAY FLOW CONTINUOUSLY IN CONDUITS, CAUSING CONDENSATION AND THE COLLECTION OF MOISTURE, THE CONDUITS SHALL BE SEALED AT EACH END WITH A PLIABLE X DUCT SEALING COMPOUND. ALSO SEAL ALL CONDUITS ENTERING AND LEAVING REFRIGERATED EQUIPMENT AND PROVIDE EXPANSION JOINTS PER N.E.C.

ALL CONNECTIONS TO MOTORS, SOLENOID VALVES, PRESSURE SWITCHES, LIMIT SWITCHES, AND SIMILAR APPARATUS SHALL BE FLEXIBLE CONDUIT WHERE PERMITTED. WHERE EQUIPMENT IS INSTALLED OUTDOORS OR EXPOSED TO MOISTURE, USE LIQUIDTIGHT FLEXIBLE CONDUIT WITH WATERTIGHT FITTINGS.

EQUIPMENT LEVELING, HANGERS AND SUPPORTS
SET EACH PIECE INSTALLED UNDER THIS DIVISION TRUE AND LEVEL. ADEQUATELY SUPPORT ALL RACEWAYS FROM THE STRUCTURE USING SCREW CLAMPS TO SECURE TO SAME. ARRANGE SUPPORTS TO PREVENT MOISTURE COLLECTION AND ALLOW ENTRANCE TO BOXES WITHOUT BENDS. INSTALL MULTIPLE CONDUITS USING CHANNEL TRAPEZE SUPPORTS TIGHT TO STRUCTURE ABOVE. USE APPROVED SPACERS TO INSULATE FROM CONTACT WITH BUILDING. SIZE CLAMPS, INSERTS, CHANNELS AND ALL OTHER MEMBERS TO SUPPORT A LOAD EQUAL TO 200% OF THE COMBINED WEIGHT OF ALL SUPPORTED MATERIAL PLUS THE WEIGHT OF A MAN.

WHERE SEVERAL RACEWAYS ARE SUPPORTED ON A COMMON TRAPEZE HANGER, SUPPORTS SHALL BE SPACED TO ACCOMMODATE THE SMALLEST SIZE RACEWAY INVOLVED. SPACE HANGERS AS FOLLOWS:
RIGID CONDUIT: 1/2 AND 3/4 IN. SIZE; 6'-0" ON CENTERS; 1 AND 1-1/4 IN. SIZE; 9'-0" ON CENTERS
ELECTRIC METALLIC TUBING:
1/2 AND 3/4 IN. SIZE; 5'-0' ON CENTERS; 1 AND 1-1/4 IN SIZE; 6'-0" ON CENTERS.

SECURELY ATTACH HANGERS AND SUPPORTS TO CONSTRUCTION BY METHODS RECOMMENDED IN THE "NECA STANDARDS OF INSTALLATION" MANUAL COORDINATION WITH MECHANICAL TRADES: THE INTENT OF THE ABOVE CEILING SUPPORTS IS TO COMBINE AS MANY PIPES, CONDUITS, ETC., AS IS POSSIBLE WITHIN SAFE STRUCTURAL LIMITS, ON EACH HORIZONTAL SECTION OF A TRAPEZE HANGER. PRIOR TO SELECTING THE HORIZONTAL MEMBER, ALL TRADES, MECHANICAL AND ELECTRICAL, SHALL COORDINATE ACTUAL NUMBER OF PIPES, CONDUITS, ETC., SUCH THAT FINAL SELECTION RESULTS IN A NEATLY GROUPED, DISCIPLINED AND ACCESSIBLE INSTALLATION.

WIRING INSTALLATION
EXCEPT FOR SUCH ITEMS AS ARE NORMALLY WIRED AT THEIR POINT OF MANUFACTURE AND SO DELIVERED - AND UNLESS SPECIFICALLY NOTED TO THE CONTRARY HEREIN - THE ELECTRICAL TRADE SHALL DO ALL ELECTRICAL WIRING OF EVERY CHARACTER. IT IS THE INTENT OF THESE SPECIFICATIONS AND DRAWINGS THAT ALL SYSTEMS AND EQUIPMENT SHALL BE PROVIDED WITH ALL NECESSARY UTILITY CONNECTIONS, COMPLETED TO ALLOW SAFE AND PROPER OPERATION OF SAID SYSTEMS. WHEN IT IS NECESSARY FOR TRADES PERFORMING WORK COVERED BY THIS DIVISION TO MAKE FINAL CONNECTIONS TO ITEMS OF EQUIPMENT BEING FURNISHED BY OTHERS, OR BY OTHER TRADES UNDER OTHER DIVISIONS, ALL SUCH WORK SHALL BE PERFORMED IN ACCORDANCE WITH THE REQUIREMENTS OF THIS DIVISION AND ALL MATERIALS USED SHALL BE AS SPECIFIED HEREIN.

MINIMUM WIRE SIZE FOR BRANCH CIRCUITS SHALL BE #12 AWG, EXCEPT THAT HOMERUNS LONGER THAN 100 FT. LENGTH FROM THE PANEL TO THE CIRCUIT'S ELECTRICAL LOAD CENTER SHALL BE #10 AWG MINIMUM. WHERE RUNS EXCEED 150', CONTRACTOR MUST ENSURE WIRE SIZE BEING UTILIZED DOES NOT CREATE A VOLTAGE DROP GREATER THAN 3%. REQUEST PROPER WIRE SIZE PRIOR TO INSTALLATION IF A 3% VOLTAGE DROP MAY OCCUR FOR ANY BRANCH CIRCUIT. WHERE MORE THAN THREE CURRENT CARRYING CONDUCTORS ARE ENCLOSED IN THE SAME RACEWAY, CONDUCTORS ARE TO BE DERATED PER N.E.C. AND WIRE SIZE INCREASED AS REQUIRED. WHERE THE INCREASED CONDUCTOR SIZE REQUIRES, INCREASE THE RACEWAY SIZE AS WELL. FOR CONTROL WIRING, USE #14 AWG MINIMUM. FOR FIXTURE WIRING, AS PERMITTED BY N.E.C., USE #18 AWG MINIMUM. FOR SIGNAL AND COMMUNICATIONS SYSTEMS USE WIRE SIZE AS SPECIFICALLY REQUIRED BY THE SYSTEM SUPPLIER.

MAKE CONNECTIONS TO TERMINALS USING PRESSURE TYPE CONNECTORS. SOLDERED JOINTS ARE PROHIBITED. ALL JOINTS IN CONDUCTORS SHALL BE MADE AT AN ACCESSIBLE LOCATION WITHIN A BOX BY TWISTING THE BARE CONDUCTOR ENDS TOGETHER AND APPLYING A WIRE CONNECTOR IN ALL SIZES UP TO THE MAXIMUM CAPACITY OF THE CONNECTOR. JOINTS SHALL BE TAPED WITH AN APPROVED ELECTRICAL TAPE. SPLICES FOR CONDUCTORS LARGER THAN #10 AWG SHALL BE MADE WITH AN APPROVED COMPRESSION (SQUEEZE) CONNECTOR INSULATED WITH NOT LESS THAN TWO LAYERS OF ELECTRICAL FILL TAPE TO 1.5 TIMES THE THICKNESS OF INSULATION, FOLLOWED BY TWO (MINIMUM) LAYERS OF HALF-LAPPED ELECTRICAL TAPE FOR MECHANICAL PROTECTION. LOCATE ALL SPLICES IN BOXES OR FITTINGS OF PROPER SIZE PER N.E.C.

IDENTIFY ALL WIRES AND CABLES WITH BRADY ADHESIVE WIRE MARKERS AT EACH BOX, PANEL, AND OUTLET. IDENTIFICATION SHALL, AS A MINIMUM, INDICATE THE PANEL AND CIRCUIT SUPPLYING THE OUTLET. AT THE PANEL END, THE LOAD SERVED AND ITS LOCATION SHALL BE INDICATED. PROVIDE A MINIMUM OF 8 IN. SLACK WIRE AT EACH OUTLET FOR MAKING CONNECTION TO THE DEVICE OR TO PROVIDE FOR A FUTURE DEVICE IN THE BOX.

BOXES
EACH BOX SHALL BE OF PROPER SIZE TO ACCOMMODATE THE DEVICE AND FUNCTION FOR WHICH IT IS SHOWN. BOXES FOR WALL DEVICES SHALL BE FURNISHED COMPLETE WITH PLASTER RING OR TILE RING ACCORDING TO WALL CONSTRUCTION WHERE REQUIRED. BOXES FOR INSTALLATION IN MASONRY WALLS SHALL BE SPECIAL SQUARE CORNER MASONRY TYPE. BOXES FOR MOUNTING OF LIGHTING FIXTURES SHALL BE FOUR INCH OCTAGON, EQUIPPED WITH 3/8 IN. "NO-BOLT" FIXTURE STUD. BOXES FOR FLOOR OUTLETS SHALL BE CONCRETE PROOF STEEL BOXES WITH ADJUSTABLE TOPS AND DEVICES AS HEREINAFTER NOTED OR SHOWN. ALL BOXES SHALL BE FURNISHED COMPLETE WITH PROPER COVER AND/OR DEVICE PLATE AND DEVICE. UNLESS OTHERWISE NOTED, PLACE OUTLET BOXES AT THE FOLLOWING HEIGHTS (BOX CENTER TO FINISH FLOOR): WALL SWITCHES 48" AND CONVENIENCE OUTLETS 18" UNLESS NOTED OTHERWISE ON DRAWINGS.

TELEPHONE, ALARM, AND SIGNAL SYSTEM OUTLET BOXES SHALL BE STANDARD OUTLET BOX TYPE WHERE ONLY ONE CONDUIT ENTERS SAME. UNLESS OTHERWISE SPECIFIED OR INDICATED ON DRAWINGS, WHERE TWO OR MORE CONDUITS ENTER, BOX SHALL BE 4-11/16 IN. SQUARE MINIMUM WITH SUITABLE ADAPTER RING.

LOCATE ALL OUTLETS AS INDICATED ON DRAWINGS, HOWEVER, AT INSTALLATION INSPECT ARCHITECTURAL DRAWINGS AND LOCATE LOCAL SWITCHES ON THE STRIKE SIDE OF THE DOOR.

SYSTEM GROUNDING
EQUIPMENT, RACEWAY SYSTEMS, WIRING SYSTEM NEUTRALS, RECEPTACLES AND POWER OUTLETS, MOTORS AND MOTORIZED EQUIPMENT, SHALL BE GROUNDED IN ACCORDANCE WITH N.E.C. ARTICLE 250.

GROUND RECEPTACLES AND POWER OUTLETS TO THE CONDUIT SYSTEM WITH A GREEN GROUNDING CONDUCTOR SIZE IN ACCORDANCE WITH N.E.C. AND CONNECTED BETWEEN THE DEVICE GROUNDING SCREW AND THE OUTLET BOX. CONNECTION TO THE BOX MAY BE A "G" CLIP OR BY A 10/24 SCREW THREADED INTO A HOLE IN THE BACK OF THE BOX AND USED FOR NO OTHER PURPOSE. EQUIPMENT CONNECTED TO THE ELECTRICAL SYSTEM SHALL BE GROUNDED WITHIN INSULATED GREEN GROUNDING CONDUCTOR SIZED IN ACCORDANCE WITH N.E.C. AND INSTALLED WITHIN THE RACEWAY. CONDUCTOR SHALL BE CONTINUOUS BETWEEN A GROUNDING SCREW IN THE EQUIPMENT JUNCTION BOX AND A GROUND ATTACHMENT IN THE NEAREST OUTLET BOX IN THE RIGID METALLIC CONDUIT SYSTEM. THIS REQUIREMENT INCLUDES ALL FLEXIBLE CONDUIT.

GENERALLY FOR TELEPHONE AND SUPPLEMENTAL COMMUNICATION SYSTEMS NO 6 AWG CONDUCTOR TO EACH PROTECTOR CABINET, OTHER CABINET, OR DEVICE INSTALLATION SHALL BE CONSIDERED SUFFICIENT, FROM THE SERVICE GROUND (UNLESS INDICATED OTHERWISE).

GROUNDING MATERIAL:
GROUND-RODS - 1/2" DIA., 10' LONG, COPPERWELD
GROUND CONDUCTOR - SIZE AS PER N.E.C. REQUIREMENTS, SOFT DRAWN OR SOFT ANNEALED, COPPER WIRE.
JOINTS AND CONNECTIONS - MOLDED FUSION WELDING PROCESS USING PROPER MOLD AND THE NUMBER, SIZE AND TYPE CARTRIDGE FOR THE JOINT OR CONNECTION. WATERPIPE CONNECTION, SILICON BRONZE APPROVED MECHANICAL CONNECTOR DESIGNED FOR THE PIPE AND CABLE TO BE BONDED.

PANELBOARD INSTALLATION:
MOUNT PANELBOARDS WITH CENTERLINE AT 5 FT.-6IN. ABOVE FINISH FLOOR, EXCEPT THAT THE HIGHEST BREAKER HANDLE SHALL BE BELOW 6 FT.-5 IN. ABOVE FINISH FLOOR. ARRANGE BREAKERS SO THAT THE BREAKER RATING IS VISIBLE WITH THE PANEL FRONT IN PLACE.

PANEL DIRECTORIES, AS A MINIMUM, SHALL BE TYPEWRITTEN AND INDICATE BREAKER POSITION NUMBER AND EQUIPMENT SERVED. THE PANEL IDENTIFICATION SHALL BE LOCATED ON THE PANEL TRIM AND SHALL CONSIST OF A BLACK LAMINATED PHENOLIC LABEL, SCREW MOUNTED, WITH THE PANEL IDENTIFICATION MATCHING PANEL IDENTIFICATION ON DRAWINGS. LABEL ALL CONDUCTORS WITH ADHESIVE WRAP LABELS WITHIN 2 IN. OF THE CONDUCTOR TERMINATION PRIOR TO INSTALLATION OF TRIM.

LIGHTING FIXTURE INSTALLATION
PROVIDE A LIGHTING FIXTURE FOR EACH AND EVERY OUTLET IN ACCORDANCE WITH TYPE DESIGNATION AND FIXTURE SCHEDULE ON THE DRAWINGS. VERIFY THE ARCHITECTURAL FINISHES AND CEILING CONSTRUCTION AND - REGARDLESS OF THE CATALOG NUMBER PREFIXES AND SUFFIXES SHOWN - PROVIDE FIXTURES WITH THE PROPER TRIM, FRAMES, SUPPORTS, AND HANGER AND OTHER MISCELLANEOUS APPURTENANCES TO PROPERLY COORDINATE WITH SAID FINISHES. REINFORCE CEILING CONSTRUCTION AS REQUIRED TO PROPERLY SUPPORT THE WEIGHT OF FIXTURES INSTALLED THEREON.

IMMEDIATELY PRIOR TO FINAL INSPECTION: THOROUGHLY CLEAN ALL FIXTURES INSIDE AND OUT, INCLUDING PLASTICS AND GLASSWARE. ADJUST TRIM TO FIT ADJACENT SURFACES. REPLACE BROKEN OR DAMAGED PARTS. INSTALL NEW LAMPS. ELECTRICALLY AND MECHANICALLY TEST THE SYSTEM FOR PROPER OPERATION.

THE CONTRACTOR IS RESPONSIBLE FOR OBTAINING APPROVAL FROM LOCAL CODE AUTHORITIES AND MAKING ANY REVISIONS DIRECTED BY THEM ON EMERGENCY AND EXIT LIGHTING.

CLEANING
THOROUGHLY CLEAN ALL FIXTURES, SWITCHES, OTHER DEVICES, PANELBOARDS, AND EQUIPMENT PROVIDED OR CONNECTED IN THIS CONTRACT. ALL SURFACES SHALL BE PROPERLY POLISHED AND SHALL BE FREE OF PAINT AND ALL OTHER DIRT OR DEBRIS. TOUCHUP OR COMPLETELY REFINISH ALL EQUIPMENT FURNISHED WITH FACTORY FINISHES THAT IS DAMAGED DURING DELIVERY OR CONSTRUCTION. PROPERLY PROTECT THE FRONTS OF ALL PANELBOARDS, SWITCHBOARDS AND SIMILAR EQUIPMENT TO PREVENT MARRING AND OTHER DEFACING.

AT ALL TIMES, KEEP THE PREMISES FREE FROM ACCUMULATIONS OF WASTE MATERIALS OR RUBBISH CAUSED BY THE WORK OF THE TRADESMEN DOING ELECTRICAL WORK. AT COMPLETION OF THE WORK, REMOVE ALL RUBBISH, TOOLS, EQUIPMENT, AND SURPLUS MATERIALS. BROOM CLEAN ALL ASSIGNED SPACES PRIOR TO LEAVING THE PREMISES.

TESTING AND LOAD BALANCING

TEST ALL CIRCUITS TO ASSURE THEM TO BE FREE OF GROUNDS AND SHORTS. LIGHT AND TEST EACH LAMP. PROVE AND TEST THE AVAILABLE VOLTAGE ON THE LOAD SIDE OF EACH DISCONNECT. VERIFY PROPER OPERATION OF THE DISCONNECT. VERIFY THE PHASE SEQUENCE, VOLTAGE, AND ROTATION AT EACH MOTOR IN THE PRESENCE OF THE INSTALLER. RUN EACH MOTOR WITH ITS CONTROL AS NEARLY AS POSSIBLE UNDER OPERATING CONDITIONS FOR A SUFFICIENT LENGTH OVER TIME TO DEMONSTRATE CORRECT ALIGNMENT, WIRING CAPACITY, SPEED, AND OVERALL SATISFACTORY OPERATION. CHECK THAT THE PROPER OVERLOAD HEATERS HAVE BEEN INSTALLED BY READING THE MOTOR NAMEPLATE. ADJUST THE SIZE OF THE OVERLOAD HEATER AS REQUIRED TO MATCH THE MOTOR NAMEPLATE. OPERATE ALL MAIN AND FEEDER SWITCHES AND BREAKERS.

THE VARIOUS BRANCH CIRCUITS SERVED FROM THE LIGHTING PANELBOARDS VARY IN LOADING. CAREFULLY BALANCE THE ACTUAL OPERATING LOAD ON EACH PANELBOARD WHEN ALL LOAD IS TURNED ON AND THE SYSTEM IS OPERATING AT 100% DEMAND, THE UNBALANCE SHALL NOT EXCEED 10%. DURING FINAL INSPECTION, FURNISH THE TEST INSTRUMENTS AND QUALIFIED PERSONNEL TO PERFORM COMPLETE TESTING. COSTS OF ALL TESTING, INCLUDING THE INCIDENT COSTS FOR RETESTING OCCASIONED BY DEFECTS AND FAILURES OF THE EQUIPMENT TO MEET THE SPECIFICATIONS, SHALL BE BORNE BY THE CONTRACTOR.

FURNISH AT THE COMPLETION OF THE PROJECT A FINAL INSPECTION CERTIFICATE FROM THE LOCAL INSPECTING AUTHORITY.

END OF SECTION 16000

ARCHITECT
B+A ARCHITECTURE, LLC
600 BROADWAY BLVD, SUITE 290
KANSAS CITY, MO 64105
PH: 816-753-6100

MEP ENGINEER
ENGINEERING BUILDING SOLUTIONS
ADDRESS 1
CITY, STATE ZIP
PH: 913-735-5654

PARKVILLE BOBA TEA SHOP
CREEKSIDE COMMONS, PARKVILLE, MO

SEAL

NOT FOR CONSTRUCTION

ISSUED: MARCH 23, 2023

NO.	REVISION	DATE

DESIGNED BY TT
DRAWN BY LH
CHECKED BY HBD

THIS DRAWING IS THE PROPERTY OF B+A ARCHITECTURE AND IS NOT TO BE REPRODUCED OR COPIED IN WHOLE OR IN PART. IT IS ONLY TO BE USED FOR THE PROJECT AND SITE SPECIFICALLY IDENTIFIED HEREIN AND IS NOT TO BE USED ON ANY OTHER PROJECT.

SCALES AS STATED HEREIN ARE VALID ON THE ORIGINAL DRAWING ONLY. CONTRACTOR SHALL CAREFULLY REVIEW ALL DIMENSIONS AND CONDITIONS SHOWN HEREIN AND AT ONCE REPORT TO THE ARCHITECT ANY ERROR INCONSISTENCY OR OMISSION DISCOVERED.

E502

MECHANICAL ABBREVIATIONS

(ALPHABETICAL BY ABBREVIATION)

ABBREVIATION	LONG FORM
ABV	ABOVE
AC OR ACU	AIR-CONDITIONING UNIT
AHAP	AS HIGH AS POSSIBLE
AHU	AIR-HANDLING UNIT
AUTO	AUTOMATIC
BLW	BELOW
C	CHILLER
CD	CONDENSATE
CF	CABINET FAN
CFM	CUBIC FEET PER MINUTE
CH	CABINET HEATER
CHP	CHILLED WATER PUMP
CLNG OR CLG	CEILING
CONC	CONCRETE
CP OR CWP	CONDENSER WATER PUMP
CS	CONDENSER WATER SUPPLY
CR	CONDENSER WATER RETURN
CRAC OR CACU	COMPUTER ROOM AIR-CONDITIONING UNIT
CREF	CHILLER ROOM EXHAUST FAN
CRU	CONDENSATE (STEAM) RETURN UNIT
CT	COOLING TOWER CELL
CTU	CONDENSATE (STEAM) TRANSFER UNIT
CU	CONDENSING UNIT
DV	CONSTANT VOLUME TERMINAL BOX
DEF	DISHWASER EXHAUST FAN
DMPR	DAMPER
DN	DOWN
EA	EACH
EBH	ELECTRIC BASEBOARD HEATER
EDH	ELECTRIC DUCT-MOUNTED HEATER
EF	EXHAUST FAN
EG	EXHAUST GRILLE
ER	EXHAUST REGISTER
EUH	ELECTRIC UNIT HEATER
EXH	EXHAUST
FD	FIRE DAMPER
FCU	FAN-COIL UNIT
FF	FINAL FILTER
FFCH	FORCED-FLOW CABINET HEATER
FFU	FAN FILTER UNIT
FP	FAN POWERED TERMINAL BOX
GPM	GALLONS PER MINUTE
HC	HEATING COIL
HUM	HUMIDIFIER
HWP OR HP	HEATING WATER PUMP
HX	HEAT EXCHANGER
KEF	KITCHEN (GREASE HOOD) EXHAUST FAN
KW	KILOWATTS
LD	LINEAR SUPPLY DIFFUSER
MOT	MOTORIZED
MTD	MOUNTED
MUAF	MAKE-UP AIR FAN
MUAHU	MAKE-UP AIR-HANDLING UNIT
OA	OUTSIDE AIR
OAF	OUTSIDE AIR FAN
OPG OR OPNG	OPENING

NOT ALL ABBREVIATIONS ON THIS LIST ARE NECESSARILY USED ON THIS PROJECT

MECHANICAL ABBREVIATIONS CONT.

(ALPHABETICAL BY ABBREVIATION)

ABBREVIATION	LONG FORM
PF	PRE-FILTER
PLNM	PLENUM
RA	RETURN AIR
RAF	RETURN AIR FAN
RAG OR RG	RETURN AIR GRILLE
RAR OR RR	RETURN AIR REGISTER
RAS	RETURN AIR SILENCER
RE:	IN REFERENCE TO
RTU	ROOFTOP UNIT
SA	SUPPLY AIR
SAF OR SF	SUPPLY AIR FAN
SAG OR SG	SUPPLY AIR GRILLE
SAR OR SR	SUPPLY AIR REGISTER
SAS	SUPPLY AIR SILENCER
SCHP	SECONDARY CHILLED WATER PUMP
SD	SMOKE DAMPER OR DETECTOR
SPCHP	SPECIAL PROCESS CHILLED WATER PUMP
TA	THROW AWAY (FILTER TYPE)
TDEF	TRUCK DOCK EXHAUST FAN
TEF	TOILET EXHAUST FAN
TRANS	TRANSITION OR TRANSFER
TYP	TYPICAL
UH	UNIT HEATER
UNO	UNLESS NOTED OTHERWISE
VF	VENTILATION FAN
VFD	VARIABLE FREQUENCY DRIVE
V V	VARIABLE VOLUME TERMINAL BOX
W/	WITH
XFMR OR TFMR	TRANSFORMER
XT OR EX	EXPANSION TANK

NOT ALL ABBREVIATIONS ON THIS LIST ARE NECESSARILY USED ON THIS PROJECT

MECHANICAL GENERAL NOTES

1. PRIOR TO SUBMITTING BID, VISIT THE SITE AND BECOME FULLY ACQUAINTED WITH THE EXISTING CONDITIONS OF THE PROJECT. REVIEW GENERAL NOTES, SPECIFICATIONS AND ALL OTHER DRAWINGS FOR ADDITIONAL REQUIREMENTS WHICH MAY NOT BE SPECIFICALLY CALLED OUT IN THIS PORTION OF THE CONSTRUCTION DOCUMENTS. NOTIFY ARCHITECT, ENGINEER AND/OR OWNER OF ANY CONFLICTS OR DISCREPANCIES PRIOR TO SUBMISSION OF BID.
2. COORDINATE THE INSTALLATION OF MECHANICAL SYSTEMS WITH OTHER TRADES TO ENSURE A NEAT AND ORDERLY INSTALLATION. DUCTWORK AND PIPING SHALL BE ROUTED TO AVOID CONFLICTS WITH ELECTRICAL PANELS, LIGHTING FIXTURES, ETC.
3. TAKE NECESSARY PRECAUTIONS TO AVOID DAMAGING EXISTING SURFACES AND EQUIPMENT TO REMAIN FOR NEW INSTALLATION DURING WORK. REPAIR ANY DAMAGE CAUSED DURING CONSTRUCTION AT NO COST TO THE OWNER.
4. ALL MECHANICAL EQUIPMENT SHOWN ON THE MECHANICAL PLANS SHALL BE PROVIDED BY THE MECHANICAL CONTRACTOR UNLESS OTHERWISE NOTED.
5. NEW MECHANICAL EQUIPMENT, DUCTWORK AND PIPING IS SHOWN AT APPROXIMATE LOCATIONS. FIELD MEASURE FINAL DUCTWORK AND PIPING LOCATIONS PRIOR TO FABRICATION AND SHALL MAKE ADJUSTMENTS AS REQUIRED TO FIT THE DUCTWORK AND PIPING WITHIN THE AVAILABLE SPACE. FIELD VERIFY FINAL LOCATIONS TO INSTALL EQUIPMENT IN ACCORDANCE WITH THE MANUFACTURER'S RECOMMENDATIONS REGARDING SERVICE CLEARANCE AND PROPER AIRFLOW CLEARANCE AROUND EQUIPMENT.
6. REFER TO ARCHITECTURAL DRAWINGS FOR ALL RELATED CONSTRUCTION DETAILS AS APPLICABLE TO THE HVAC SYSTEM. CHASE AND PENETRATIONS INTENDED FOR DUCTWORK AND PIPING SHALL BE VERIFIED WITH ARCHITECTURAL DRAWINGS PRIOR TO INSTALLATION.
7. COORDINATE LOCATION OF ROOF PENETRATIONS WITH THE EXISTING CONDITIONS AND ARCHITECTURAL DRAWINGS.
8. SEAL ALL PENETRATIONS THROUGH THE BUILDING COMPONENTS IN ACCORDANCE WITH THE CONSTRUCTION SPECIFICATIONS. FIREPROOF ALL PENETRATIONS THROUGH FIRE RATED COMPONENTS IN ACCORDANCE WITH U.L. REQUIREMENTS.
9. COORDINATE THE EXACT MOUNTING SIZE AND FRAME TYPE OF DIFFUSERS, REGISTERS AND GRILLES WITH THE SUPPLIER TO MEET THE CEILING, WALL, AND DUCT INSTALLATION REQUIREMENTS.
10. LOCATION OF CEILING DIFFUSERS, REGISTERS, AND GRILLES SHALL BE ADJUSTED AS REQUIRED TO ACCOMMODATE FINAL CEILING AND LIGHTING LOCATIONS.
11. DUCTWORK CROSSING FIRE RATED WALL OR OTHER FIRE RATED ASSEMBLIES SHALL BE MINIMUM 26 GAUGE SHEET METAL.
12. PROVIDE FIRE AND/OR FIRE/SMOKE DAMPERS IN DUCTWORK AT CEILINGS AND WALLS AS REQUIRED BY BUILDING CODE AUTHORITY HAVING JURISDICTION. FIRE AND FIRE/SMOKE DAMPERS SHALL CONFORM TO NFPA AS APPLICABLE.
13. PROVIDE WALL AND/OR DUCT ACCESS PANELS OR DOORS FOR ACCESS TO ALL FIRE AND/OR FIRE/SMOKE DAMPERS. ACCESS PANEL OR DOOR SHALL BE MINIMUM SIZE OF 6"x6" AND SHALL BE INSTALLED WITH 12" OF DAMPER. PROVIDE A REMOVABLE DUCT SECTION WHERE DUCT SIZE IS TOO SMALL FOR A 6"x6" ACCESS DOOR.
14. THERMOSTATS AND HUMIDISTATS SHALL BE LOCATED AND SET BY MECHANICAL CONTRACTOR AND WIRED IN CONDUIT BY ELECTRICAL CONTRACTOR. VERIFY EXACT LOCATIONS WITH ARCHITECT PRIOR TO INSTALLATION. MOUNTING HEIGHTS SHALL BE 48" AFF TO MEET ADA REQUIREMENTS UNLESS OTHERWISE NOTED ON PLANS.
15. COORDINATE THE LOCATION AND ELEVATION OF WALL-MOUNTED DEVICES WITH ANY WALL MOUNTED ITEMS INDICATED ON THE ARCHITECTURAL DRAWINGS. CONTRACTOR WILL NOT BE REIMBURSED FOR RELOCATION OF ANY WALL-MOUNTED DEVICES CAUSED BY A LACK OF COORDINATION.
16. ALL BRANCH DUCT CONNECTIONS AND TAKE-OFFS TO INDIVIDUAL DIFFUSERS, REGISTERS, AND GRILLES SHALL HAVE A PREFABRICATED 45 DEGREE, HIGH EFFICIENCY, RECTANGULAR/ROUND BRANCH DUCT TAKEOFF FITTING WITH MANUAL BALANCING DAMPER AND LOCKING QUADRANT.
17. BRANCH DUCTWORK TO AIR OUTLETS SHALL BE SAME SIZE AS OUTLET NECK SIZE UNLESS OTHERWISE NOTED.
18. RIGID DUCTWORK INSULATION: PROVIDE R-6 MINIMUM INSULATION WRAP ON ALL CONCEALED DUCTWORK. PROVIDE R-6 MINIMUM INTERNAL DUCT LINER ON ALL EXPOSED DUCTWORK. DUCT SIZES ON MECHANICAL PLANS INDICATE CLEAR INSIDE DIMENSIONS, SHEET METAL SIZES SHALL INCREASE ACCORDINGLY. PROVIDE R-12 MINIMUM INSULATION ON ALL DUCTWORK INSTALLED IN UNCONDITIONED SPACES. REFER TO SPECIFICATIONS FOR MORE INFORMATION.
19. FLEXIBLE DUCT WORK SHALL BE THERMAFLEX TYPE MKE, FLEXMASTER TYPE 8M, OR APPROVED EQUAL, SHALL BE LISTED UNDER 181 AS CLASS 1 AIR DUCT AND SHALL BE PROVIDED WITH INTEGRAL R-6 MINIMUM FIBERGLASS INSULATION. FLEXIBLE DUCTWORK SHALL NOT EXCEED 5'-0" IN LENGTH AND SHALL BE INSTALLED AND SUPPORT TO AVOID SHARP BENDS AND SAGGING.
20. WALL MOUNTED DIFFUSERS AND GRILLES SHALL BE PROVIDED WITH SUITABLE MOUNTING FRAME TO MATCH WALL CONSTRUCTION. COORDINATE WITH ARCHITECTURAL DRAWINGS.

DUCTWORK LEGEND

(REFER TO SPECIFICATIONS SECTIONS 15815 AND 15820 FOR ADDITIONAL INFORMATION)

SINGLE LINE	DESCRIPTION	DOUBLE LINE
	ROUND ELBOW DOWN	
	ROUND ELBOW UP	
	OFFSET TO CHANGE ELEVATION (AT 30° WHEN POSSIBLE. ARROW SLOPES DN, U.N.O.)	
	ROUND RADIUS ELBOW	
	90° STRAIGHT TEE	
	90° CONICAL TEE	
	45° LATERAL TAP	
	45° LATERAL CONICAL TEE	
	SIZE OR SHAPE TRANSITION	
	ROUND FLEXIBLE DUCT	
	RECTANGULAR ELBOW DOWN	
	RECTANGULAR ELBOW UP	
	OFFSET TO CHANGE ELEVATION (AT 30° WHERE POSSIBLE. ARROW SLOPES DN., U.N.O.)	
	RECTANGULAR RADIUS ELBOW	
	RECTANGULAR ELBOW WITH TURNING VANES	
	SPLIT BRANCH TAKE-OFF WITH SQUARE ELBOW & SPLITTER DAMPER	
	SPLIT BRANCH TAKE-OFF WITH RADIUS ELBOW & SPLITTER DAMPER	
	SPLIT BRANCH TAKE-OFF TEE WITH STATIONARY SPLITTER DAMPER	
	BRANCH TAKE-OFF WITH 45° LEAD IN TAP	
	INSULATED/LINED DUCTWORK (U.N.O.)	
	SQUARE FACED CEILING DIFFUSER 4-WAY DIRECTIONAL THROW (U.N.O.)	
	ROUND FACED CEILING DIFFUSER	
OR	CEILING RETURN OR EXHAUST AIR GRILLE OR REGISTER	
	SIDEALL SUPPLY GRILLE OR REGISTER	
	SUPPLY DUCT RISER	
	RETURN, EXHAUST OR OUTSIDE AIR DUCT RISER	
	MANUAL BALANCING DAMPER	
	AUTOMATIC (MOTOR-OPERATED) DAMPER	
	FIRE DAMPER	
	GRAVITY BACKDRAFT DAMPER	
	COMBINATION FIRE AND SMOKE DAMPER WITH SMOKE DETECTOR	
	SMOKE DAMPER (AUTOMATIC) WITH SMOKE DETECTOR	
S	DUCT MOUNTED SMOKE DETECTOR	S OR S

NOT ALL SYMBOLS ON THIS LIST ARE NECESSARILY USED ON THIS PROJECT

STANDARD MECHANICAL SYMBOLS

SYMBOL	DESCRIPTION	
	GATE VALVE	VALVES, FITTINGS, & DEVICES
	BALL VALVE	
	GLOBE VALVE	
	BUTTERFLY VALVE	
	PLUG VALVE	
	ANGLE VALVE	
	CHECK VALVE	
	AUTOMATIC CONTROL VALVE (STRAIGHT THROUGH)	
	AUTOMATIC CONTROL VALVE (3-WAY)	
	AUTOMATIC CONTROL VALVE (ANGLE)	
	AUTOMATIC CONTROL VALVE (STRAIGHT THROUGH)	
	SOLENOID VALVE	
	PRESSURE REDUCING VALVE	
	PRESSURE RELIEF VALVE	
	GAUGE COCK	
	PRESSURE GAUGE WITH GAUGE COCK	
	THERMOMETER	
	THERMOMETER WELL	
	TEST PLUG	
F	FLOW METER	
T	TEMPERATURE SENSOR	
P	PRESSURE SENSOR	
DP	DIFFERENTIAL PRESSURE SWITCH	
T	IMMERSION THERMOSTAT	
	MANUAL AIR VENT	
	AUTOMATIC AIR VENT	
FS	FLOW SWITCH	
	ORIFICE	
	PIPE SLEEVE THRU WALL OR FLOOR	
	EXPANSION JOINT	
	FLEXIBLE PIPE JOINT	
	PIPE GUIDE	
	ANCHOR	
	STRAINER (Y-TYPE)	
	STRAINER (BASKET TYPE)	
	UNION	
	CONCENTRIC REDUCER	
	ECCENTRIC REDUCER	
	DIRECTION OF FLOW	
	DIRECTION OF SLOPE	
T	THERMOSTAT	
H	HUMIDISTAT	
FSC	FAN SPEED CONTROLLER	
— CS —	CONDENSER WATER SUPPLY	PIPING
— CR —	CONDENSER WATER RETURN	
— D —	CONDENSATE DRAIN	

NOT ALL SYMBOLS ON THIS LIST ARE NECESSARILY USED ON THIS PROJECT

OTHER SYMBOLS

SYMBOL	DESCRIPTION
	INDICATES CONNECTION TO EXISTING DUCT OR PIPE

GENERAL EQUIPMENT DESIGNATION KEY:

EQUIPMENT ABBREVIATION

AHU-R-2 ← SCHEDULE DESIGNATION NUMBER.

LEVEL OR BUILDING:

ARCHITECT
B+A ARCHITECTURE, LLC
600 BROADWAY BLVD, SUITE 290
KANSAS CITY, MO 64105
PH: 816-753-6100

MEP ENGINEER
ENGINEERING BUILDING SOLUTIONS
ADDRESS 1
CITY, STATE ZIP
PH: 913-735-5654

PARKVILLE BOBA TEA SHOP

CREEKSIDE COMMONS, PARKVILLE, MO

SEAL

NOT FOR CONSTRUCTION

ISSUED: MARCH 23, 2023

NO.	REVISION	DATE

DESIGNED BY TT
DRAWN BY LH
CHECKED BY HBD

THIS DRAWING IS THE PROPERTY OF B+A ARCHITECTURE AND IS NOT TO BE REPRODUCED OR COPIED IN WHOLE OR IN PART. IT IS ONLY TO BE USED FOR THE PROJECT AND SITE SPECIFICALLY IDENTIFIED HEREIN AND IS NOT TO BE USED ON ANY OTHER PROJECT.

SCALES AS STATED HEREIN ARE VALID ON THE ORIGINAL DRAWING ONLY. CONTRACTOR SHALL CAREFULLY REVIEW ALL DIMENSIONS AND CONDITIONS SHOWN HEREIN AND AT ONCE REPORT TO THE ARCHITECT ANY ERROR INCONSISTENCY OR OMISSION DISCOVERED.

M101

FURNACE SCHEDULE

MARK	MANUFACTURER	MODEL	NOMINAL TONNAGE	SUPPLY FAN CFM	SUPPLY FAN ESP (IN)	SUPPLY FAN MIN. HP	COOLING COIL TH (MBH)	COOLING COIL SH (MBH)	COOLING COIL EAT (DB/WB)	HEATING INPUT MBH	HEATING OUTPUT MBH	MIN O/A CFM	ELECTRICAL MCA	ELECTRICAL MOCP	ELECTRICAL V/PH/HZ	NOTE
F-1	TRANE	S9V2B080	3.5	1400	0.50	3/4	41.0	33.0	80/67	80.0	77.6	250	10.8	15.0	120/1/60	1,2,3,4
F-2	TRANE	S9V2B080	3.5	1400	0.50	3/4	41.0	33.0	80/67	80.0	77.6	250	10.8	15.0	120/1/60	1,2,3,4

NOTES:
1 PROVIDE WITH TWO SETS OF 2" THICK THROW-AWAY FILTERS.
2 PROVIDE UNIT WITH FACTORY MOUNTED DISCONNECT.
3 PROVIDE SECONDARY DRAIN PAN WITH FLOAT SWITCH, UNIT SHALL SHUT DOWN UPON ALARM FROM FLOAT SWITCH.
4 PROVIDE EQUIPMENT STAND FOR FLOOR MOUNTING.

CONDENSING UNIT SCHEDULE

MARK	SERVICE	MANUFACTURER	MODEL	NOMINAL TONNAGE	MOTOR HP	MOTOR FLA	COOLING TOTAL (MBH)	COOLING SENSIBLE (MBH)	SEER	ELECTRICAL MCA	ELECTRICAL MOCP	ELECTRICAL V/PH/HZ	NOTES
CU-1	F-1	TRANE	4TTL6042	3.5	1/5	1.2	41.0	33.0	16.0	22	35	208/1/60	1,2,3,4,5,6,7,8
CU-2	F-2	TRANE	4TTL6042	3.5	1/5	1.2	41.0	33.0	16.0	22	35	208/1/60	1,2,3,4,5,6,7,8

NOTES:
1 EQUIPMENT SIZED FOR AMBIENT TEMPERATURE OF 105°F, SUMMER DB = 95.3°F, WB = 78.9°F, WINTER DB = 2.7°F.
2 PROVIDE WITH LOW AMBIENT CONTROLS.
3 PROVIDE WITH EQUIPMENT RAILS FLASHED TO ROOF.
4 PROVIDE WITH FACTORY MOUNTED DISCONNECT.
5 PROVIDE STARTERS FOR ALL MOTORS.
6 SIZE AND INSTALL REFRIGERANT LINES PER THE MANUFACTURERS RECOMMENDATIONS, VERIFY WITH EQUIPMENT SUPPLIER REFRIGERATION LINE LENGTH AND SIZE.
7 PROVIDE LIQUID LINE FILTER DRYER AND SIGHT GLASS.

EXHAUST FAN SCHEDULE

MARK	MANUFACTURER	MODEL	MOUNTING	VOLUME (CFM)	ESP (IN)	FAN RPM	DRIVE (BELT/DIRECT)	MOTOR WATTS	ELECTRICAL VOLTS/PH	WEIGHT (LBS)	NOTE
EF-1	GREENHECK	SP-A200	CEILING	70	0.375	691	DIRECT	21	120/1	30	1,2

NOTES:
1 PROVIDE WITH BACK DRAFT DAMPER AND SPEED CONTROLLER FOR BALANCING. COORDINATE GRILLE FINISH WITH OWNER.
2 FAN SHALL BE INTERLOCKED WITH RESTROOM LIGHTS.

GRILLE, REGISTER, AND DIFFUSER SCHEDULE

MARK	MANUFACTURER	MODEL	FACE TYPE	MOUNTING LOCATION	FACE SIZE (IN)	NOTES
SD1	TITUS	300FL	PERFORATED	WALL	NECK + 1-3/4"	1,3,4,5,6
SD2	TITUS	PAS	PERFORATED	CEILING	24"x24"	1,2,3,4,5,6,7
RG1	TITUS	PAR	PERFORATED	CEILING	24"x24"	1,3,4,6,7

NOTES:
1 NECK SIZE SHOWN ON DRAWINGS.
2 4-WAY THROW PATTERN, UNLESS SHOWN OTHERWISE ON DRAWINGS.
3 BAKED ENAMEL FINISH TO MATCH CEILING/WALL COLOR, COORDINATE WITH ARCHITECTURAL PLANS.
4 PROVIDE NECK FOR DUCT CONNECTION.
5 BRANCH DUCT SIZE SHALL BE SAME AS NECK SIZE UNLESS OTHERWISE SHOWN ON DRAWINGS.
6 FRAME TYPE TO MATCH CONSTRUCTION OF MOUNTING LOCATION, COORDINATE WITH ARCHITECTURAL PLANS.
7 PROVIDE WITH VOLUME DAMPER OPERABLE FROM FACE OF DIFFUSER/GRILLE IN HARD CEILINGS.

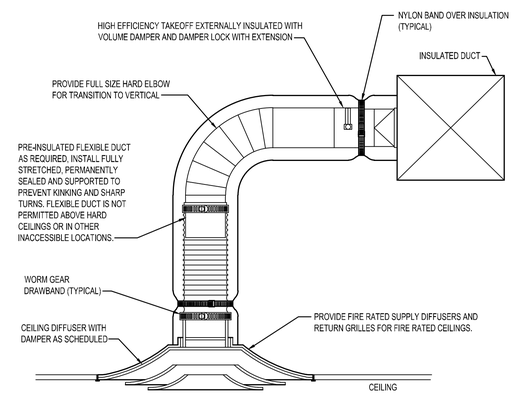

3 **LAY-IN CEILING DIFFUSER**
NOT TO SCALE

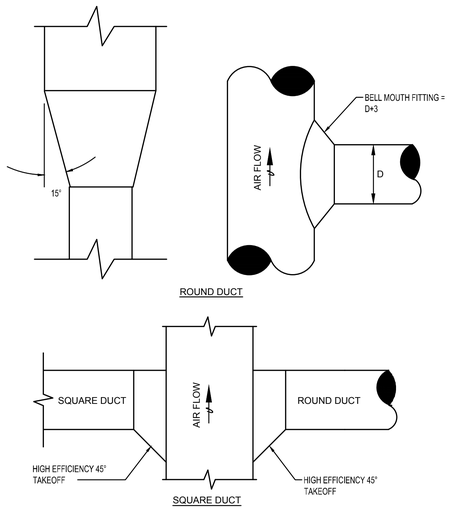

4 **DUCT TAKEOFFS AND FITTINGS**
NOT TO SCALE

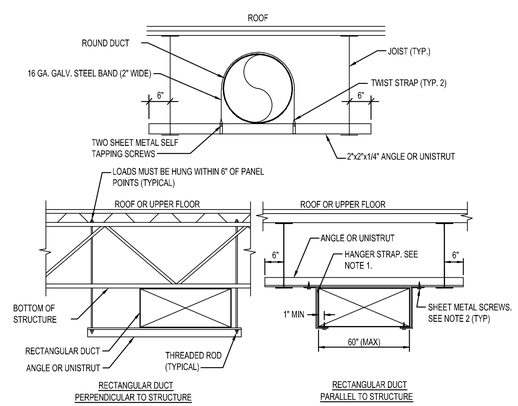

NOTE:
1. USE THREADED ROD FOR ALL DUCTS LARGER THAN 60" WIDE.
2. SHEET METAL SCREWS MAY BE OMITTED IF HANGER STRAP IS CONTINUOUS AND LOOPS UNDER ENTIRE DUCT.

2 **DUCT HANGERS AND SUPPORTS**
NOT TO SCALE

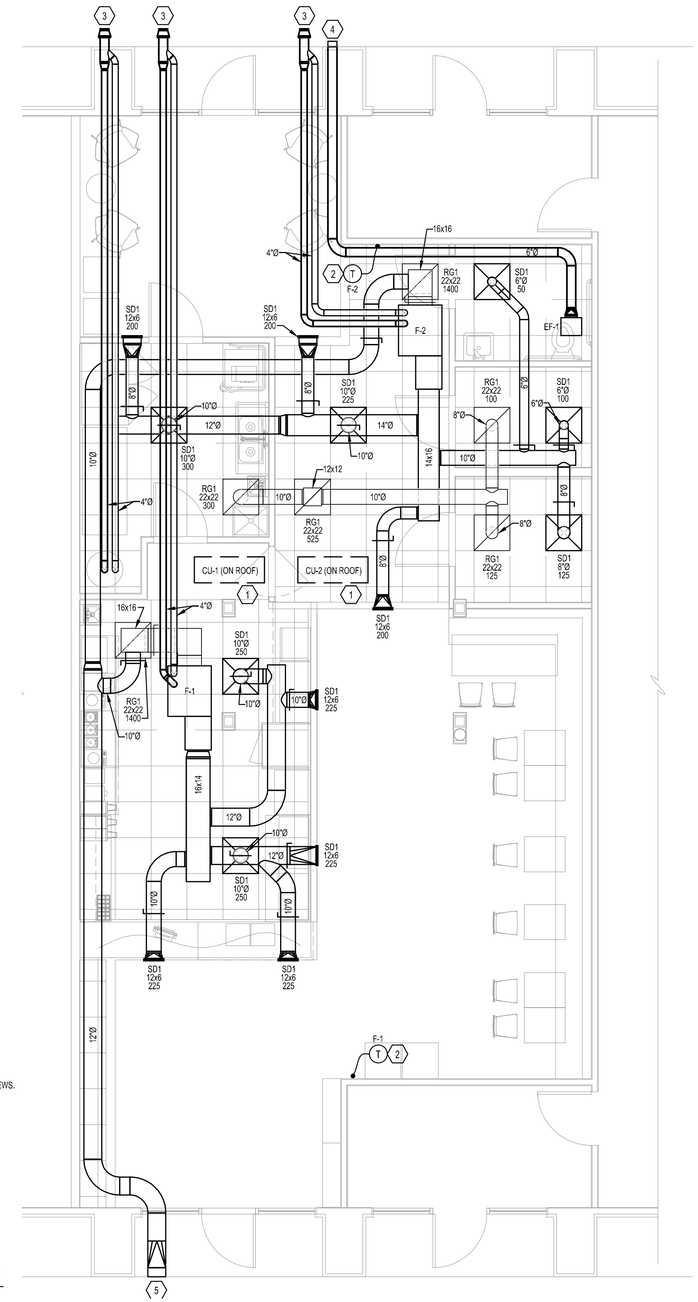

1 **MECHANICAL PLAN**
SCALE: 1/4" = 1'-0"

GENERAL NOTES
(NOT ALL NOTES APPLY)

1. REFERENCE SHEET M101 FOR GENERAL NOTES, SYMBOLS, AND ABBREVIATIONS.

KEYED NOTES:

1. CONDENSING UNIT MOUNTED ON ROOF SHOWN FOR REFERENCE ONLY. VERIFY EXACT LOCATION WITH LANDLORND OTHER ROOFTOP EQUIPMENT.
2. PROVIDE 7-DAY PROGRAMMABLE THERMOSTAT WITH AUTO-CHANGEOVER BETWEEN HEATING AND COOLING. MOUNT THERMOSTAT AT 48" AFF.
3. ROUTE 4"Ø COMBUSTION INTAKE AND EXHAUST PIPING TO EXTERIOR WALL AND TERMINATE WITH CONCENTRIC VENT PER MANUFACTURER'S INSTALLATION INSTRUCTIONS.
4. ROUTE 6"Ø EXHAUST DUCT FROM CEILING MOUNTED EXHAUST FAN TO EXTERIOR WALL AND TERMINATE WITH MANUFACTURER'S WALL CAP.
5. ROUTE 12"Ø OUTSIDE AIR INTAKE DUCT TO EXTERIOR WALL. PROVIDE 12"x12" INTAKE LOUVER AT EXTERIOR WALL. TRANSITION AS REQUIRED.

ARCHITECT
B+A ARCHITECTURE, LLC
600 BROADWAY BLVD, SUITE 290
KANSAS CITY, MO 64105
PH: 816-753-6100

MEP ENGINEER
ENGINEERING BUILDING SOLUTIONS
ADDRESS 1
CITY, STATE ZIP
PH: 913-735-5654

PARKVILLE BOBA TEA SHOP
CREEKSIDE COMMONS, PARKVILLE, MO

SEAL

NOT FOR CONSTRUCTION

ISSUED: MARCH 23, 2023

NO.	REVISION	DATE

DESIGNED BY TT
DRAWN BY LH
CHECKED BY HBD

THIS DRAWING IS THE PROPERTY OF B+A ARCHITECTURE AND IS NOT TO BE REPRODUCED OR COPIED IN WHOLE OR IN PART. IT IS ONLY TO BE USED FOR THE PROJECT AND SITE SPECIFICALLY IDENTIFIED HEREIN AND IS NOT TO BE USED ON ANY OTHER PROJECT.

SCALES AS STATED HEREIN ARE VALID ON THE ORIGINAL DRAWING ONLY. CONTRACTOR SHALL CAREFULLY REVIEW ALL DIMENSIONS AND CONDITIONS SHOWN HEREIN AND AT ONCE REPORT TO THE ARCHITECT ANY ERROR INCONSISTENCY OR OMISSION DISCOVERED.

M201

15000 - BASIC MECHANICAL REQUIREMENTS

DRAWINGS AND GENERAL PROVISIONS OF CONTRACT, INCLUDING GENERAL AND SUPPLEMENTARY CONDITIONS AND ALL OTHER SPECIFICATION SECTIONS, APPLY TO THIS AND THE OTHER SECTIONS OF DIVISION 15.

READ THE SPECIFICATIONS AND REVIEW DRAWINGS FOR ALL DIVISIONS OF WORK AND COORDINATE AND THE WORK OF SUBCONTRACTORS WITH ALL DIVISIONS OF WORK. PROVIDE SUBCONTRACTORS WITH A COMPLETE SET OF BID DOCUMENTS.

SCHEDULE THE COMPLETION AND INSPECTION OF WORK AND THE WORK OF SUBCONTRACTORS WORK TO COMPLY WITH THE SCHEDULE AND THE PROJECT COMPLETION DATE.

VISIT THE SITE PRIOR TO SUBMITTAL OF BID TO DETERMINE CONDITIONS AFFECTING THE WORK. ANY ITEMS WHICH ARE NOT COVERED IN THE BID DOCUMENTS OR ANY PROPOSED SUBSTITUTIONS SHALL BE LISTED SEPARATELY AND QUALIFIED IN THE BID. SUBMITTAL OF BID SHALL SERVE AS EVIDENCE OF KNOWLEDGE OF EXISTING CONDITIONS AND ANY MODIFICATIONS WHICH ARE REQUIRED TO MEET THE INTENT OF THE DRAWINGS AND SPECIFICATIONS. FAILURE TO VISIT THE SITE DOES NOT RELIEVE RESPONSIBILITY IN PERFORMANCE OF WORK.

READ ALL RELEVANT DOCUMENTS, BECOME FAMILIAR WITH THE JOB, SCOPE OF WORK, TYPE OF GENERAL CONSTRUCTION, AND THE ARCHITECTURAL, STRUCTURAL, MECHANICAL AND ELECTRICAL DRAWINGS AND SPECIFICATIONS. ALSO UNDERSTAND THE PURPOSE FOR WHICH THESE DOCUMENTS HAVE BEEN PREPARED AND BECOME COGNIZANT OF ALL THE DETAILS INVOLVED. COORDINATE WORK WITH THAT OF OTHERS.

DEFINITIONS:

FURNISH - PURCHASE AND DELIVER TO PROJECT SITE COMPLETE WITH EVERY NECESSARY APPURTENANCE AND SUPPORT.
INSTALL - UNLOAD AT THE DELIVERY POINT AT THE SITE AND PERFORM EVERY OPERATION NECESSARY TO ESTABLISH SECURE MOUNTING AND CORRECT OPERATION AT THE PROPER LOCATION IN THE PROJECT.
PROVIDE - FURNISH AND INSTALL

GENERAL REQUIREMENTS

PROVIDE ALL LABOR, MATERIALS, EQUIPMENT, SERVICES, TOOLS, TRANSPORTATION, INCIDENTALS AND DETAILS NECESSARY TO PROVIDE A COMPLETE MECHANICAL SYSTEM AS SHOWN ON THE DRAWINGS, CALLED FOR IN THE SPECIFICATIONS, AND AS REQUIRED BY JOB CONDITIONS. ALL WORK NOT SPECIFICALLY NOTED AS BEING BY THE OTHERS SHALL BE PROVIDED. CLOSELY COORDINATE THE ENTIRE INSTALLATION WITH THE ARCHITECT-ENGINEER, AS REQUIRED.

THE DRAWINGS AND SPECIFICATIONS ARE INTENDED TO SUPPLEMENT EACH OTHER AND ANY MATERIAL OR LABOR CALLED FOR IN ONE SHALL BE FURNISHED AND INSTALLED EVEN THOUGH NOT SPECIFICALLY MENTIONED IN BOTH. ANY MATERIAL OR LABOR WHICH IS NEITHER SHOWN ON THE DRAWINGS NOR CALLED FOR IN THE SPECIFICATIONS, BUT WHICH IS OBVIOUSLY NECESSARY TO COMPLETE THE WORK, AND WHICH IS USUALLY INCLUDED IN WORK OF SIMILAR CHARACTER, SHALL BE FURNISHED AND INSTALLED AS PART OF CONTRACT.

WHERE THE DRAWINGS OR SPECIFICATIONS CALL FOR ITEMS WHICH EXCEED CODES OR THE OWNERS CRITERIA, PROVIDE THE SYSTEM WITH THE MORE STRINGENT REQUIREMENTS AS DESIGNED AND DESCRIBED ON THESE DRAWINGS, UNLESS SPECIFICALLY NOTED OTHERWISE.

ALL MECHANICAL WORK SHALL BE INSTALLED SO AS TO BE READILY ACCESSIBLE FOR OPERATING, SERVICING, MAINTAINING, AND REPAIRING. THIS CONTRACTOR IS RESPONSIBLE FOR PROVIDING SUFFICIENT SERVICE ACCESS TO ALL EQUIPMENT.

ALL WORK SHALL BE PERFORMED IN A NEAT PROFESSIONAL MANNER USING GOOD ENGINEERING PRACTICES.

UNLESS SPECIFICALLY NOTED OTHERWISE, MATERIALS, PRODUCTS, AND EQUIPMENT, INCLUDING ALL COMPONENTS THEREOF, SHALL BE NEW, UNDERWRITERS LABORATORIES LISTED AND LABELED AND SIZED IN CONFORMITY WITH REQUIREMENTS OF STATE AND LOCAL CODES, WHICHEVER IS MORE STRINGENT.

CODES

ALL WORK SHALL CONFORM TO THE OWNER'S CRITERIA, THE STATE'S, COUNTY'S, CITY'S AND LOCAL CODES AND ORDINANCES, SAFETY AND HEALTH CODES, NFPA CODES, ENERGY CODES AND ALL OTHER APPLICABLE CODES AND REQUIREMENTS. INQUIRE INTO AND COMPLY WITH ALL APPLICABLE CODES, ORDINANCES, AND REGULATIONS. INCLUDE ANY CHANGES REQUIRED BY CODES IN THE BID AND IF THESE CHANGES ARE NOT INCLUDED IN THE BID, THEY MUST BE QUALIFIED AS A SEPARATE LINE ITEM IN THE BID. AFTER CONTRACT IS ISSUED, NO ADDITIONAL COST DUE TO CODE ISSUES SHALL BE REIMBURSED BY THE OWNER.

LICENSES, PERMITS, COMMISSIONING, INSPECTIONS & FEES

OBTAIN AND PAY FOR ALL LICENSES, PERMITS, COMMISSIONING, INSPECTIONS, AND FEES REQUIRED OR RELATED TO THIS WORK.

PROVIDE TO THE OWNER-ARCHITECT A COMMISSIONING PLAN, PRELIMINARY COMMISSIONING REPORT, FINAL COMMISSIONING REPORT, AND CERTIFICATES OF INSPECTION AND FINAL INSPECTION APPROVAL AT COMPLETION OF PROJECT.

TRADE NAMES, MANUFACTURERS AND SHOP DRAWINGS

WHERE TRADE NAMES AND MANUFACTURERS ARE USED ON THE DRAWINGS OR IN THE SPECIFICATIONS, THE EXACT EQUIPMENT SHALL BE USED AS A MINIMUM FOR THE BASE BID. MANUFACTURERS CONSIDERED AS AN EQUAL OR BETTER IN ALL ASPECTS TO THAT SPECIFIED WILL BE SUBJECT TO APPROVAL IN WRITING BY ARCHITECT-ENGINEER PRIOR TO BID THROUGH SHOP DRAWING SUBMITTAL PROCESS, FOR ACCEPTANCE PRIOR TO INSTALLATION. ANY CHANGES TO ELECTRICAL SERVICE, STRUCTURAL FRAMING, ETC. OR ANY OTHER MODIFICATION THAT IS REQUIRED BY THE USE OF ALTERNATE EQUIPMENT SHALL BE COORDINATED WITH OTHER TRADES AND SHALL INCLUDE ALL COSTS IN BID FOR THE REQUIRED CHANGES. THE USE THE USE OF ANY UNAUTHORIZED EQUIPMENT SHALL BE SUBJECT TO REMOVAL AND REPLACEMENT AT NO EXPENSE TO THE OWNER.

GUARANTEE

GUARANTEE ALL MATERIALS AND WORK PROVIDED UNDER THIS CONTRACT AND MAKE GOOD, REPAIR OR REPLACE AT NO EXPENSE TO THE OWNER, ANY DEFECTIVE WORK, MATERIAL, OR EQUIPMENT WHICH MAY BE DISCOVERED WITHIN A PERIOD OF TWELVE (12) MONTHS FROM THE DATE OF ACCEPTANCE (IN WRITING) OF THE INSTALLATION. EXTENDED WARRANTIES ARE AS SPECIFIED WITH INDIVIDUAL EQUIPMENT.

QUALITY ASSURANCE

INDUSTRY STANDARDS AND CODES: UNLESS MODIFIED BY THESE SPECIFICATIONS, THE DESIGN, MANUFACTURER, TESTING AND METHOD OF INSTALLING ALL MATERIALS, APPARATUS AND EQUIPMENT SHALL CONFORM TO THE FOLLOWING:

1. ARI CODE FOR REFRIGERATION APPARATUS
2. ANSI B9.1 SAFETY CODE FOR MECHANICAL REFRIGERATION
3. STANDARDS OF NATIONAL FIRE PROTECTION ASSOCIATION
4. SMACNA
5. ASHRAE

RECORD DRAWINGS

MAINTAIN ONE COPY OF DRAWINGS ON THE JOB SITE TO RECORD DEVIATIONS FROM CONTRACT DRAWINGS, SUCH AS: LOCATION OF CONCEALED PIPING VALVES AND DUCTS, REVISIONS, ADDENDUMS, AND CHANGE ORDERS, AND SIGNIFICANT DEVIATIONS MADE NECESSARY BY FIELD CONDITIONS, APPROVED EQUIPMENT SUBSTITUTIONS, AND CONTRACTOR'S COORDINATION WITH OTHER TRADES.

AT COMPLETION OF THE PROJECT AND BEFORE FINAL APPROVAL, MAKE ANY FINAL CORRECTIONS TO DRAWINGS AND CERTIFY THE ACCURACY OF EACH PRINT BY SIGNATURE THEREON. A SET OF REPRODUCIBLE DRAWINGS ALONG WITH ONE SET OF BLULINES OF THE MOST RECENT SET OF DRAWINGS WITH TEMPERATURE CONTROL DRAWINGS INCLUDED SHALL BE DELIVERED TO THE ARCHITECT UPON COMPLETION OF THE WORK AND PRIOR TO FINAL ACCEPTANCE OF THE PROJECT.

DISCREPANCIES IN DOCUMENTS

DRAWINGS (PLANS, SPECIFICATIONS, AND DETAILS) ARE DIAGRAMMATIC AND INDICATE THE GENERAL LOCATION AND INTENT OF THE MECHANICAL SYSTEMS. WHERE DRAWINGS, EXISTING SITE CONDITIONS, SPECIFICATIONS OR OTHER TRADES CONFLICT OR ARE UNCLEAR, ADVISE THE ARCHITECT-ENGINEER IN WRITING, OF VARIATIONS TO CONTRACT DOCUMENTS PRIOR TO SUBMISSION OF BID. OTHERWISE, ARCHITECT-ENGINEER'S INTERPRETATION OF CONTRACT DOCUMENTS OR CONDITIONS SHALL BE FINAL WITH NO ADDITIONAL COMPENSATION PERMITTED.

PHASING REQUIREMENTS

INCLUDE IN BID ALL NECESSARY SERVICE REQUIRED TO KEEP THE OPERATING PHASE OF THE PROJECT'S HVAC, PLUMBING AND SPRINKLER SERVICE IN OPERATION. IF APPLICABLE, SCHEDULE IN WRITING WITH ARCHITECT ONE WEEK PRIOR TO ANY SHUT DOWN OF THE HVAC, PLUMBING OR FIRE PROTECTION SYSTEMS.

DEMOLITION

COORDINATE THE DEMOLITION OF EXISTING WORK AND THE DEMOLITION PROVIDED BY OTHER. COORDINATE ANY EXISTING EQUIPMENT REQUIRED TO BE LEFT INTACT.

VERIFY SCOPE OF AND THE REMOVAL OF ALL EXISTING FIRE PROTECTION, PLUMBING FIXTURES, PIPING, HVAC UNITS, REFRIGERANT RECAPTURE, EXHAUST FANS, ETC. AND ASSOCIATED ROOF CURBS NOT TO BE REUSED ON THIS PROJECT, UNLESS SPECIFICALLY NOTED OTHERWISE. VERIFY ALL PRESUMED ABANDONED EQUIPMENT, PIPES, DUCTWORK, AND EQUIPMENT PRIOR TO REMOVAL. ROOF CURBS SHALL BE REMOVED AND THE ROOF PATCHED. ALL EXTRANEOUS ITEMS IN THE SPACE OR ON THE ROOF NOT APPLICABLE TO THE NEW WORK MUST BE REMOVED AND ROOF/WALL/FLOOR PATCHED/REPAIRED TO MATCH EXISTING STRUCTURE. EXISTING ABANDONED PIPES, DUCTS, OR EQUIPMENT IN THE FLOOR, EMBEDDED IN CONCRETE, OR OTHERWISE INACCESSIBLE ARE TO BE CUT OFF AND SEALED BELOW OR WITHIN FLOOR OR WALL LEVEL WHEN THEY ARE NOT TO BE REUSED IN THIS PROJECT. ABANDONED PIPING AND/OR DUCTWORK MUST BE REMOVED TO POINT OF ORIGIN. CONFIRM THE EXTENT OF DEMOLITION PRIOR TO BID AND INCLUDE IN BID PROPOSAL.

CUTTING AND PATCHING

PERFORM ALL CUTTING AND PATCHING AS REQUIRED FOR THE INSTALLATION OF THE WORK UNDER THIS SPECIFICATION. NO CUTTING OF THE STRUCTURE SHALL BE PERMITTED WITHOUT WRITTEN APPROVAL OF THE STRUCTURAL ENGINEER OR ARCHITECT.

PATCHING SHALL BE OF THE SAME WORKMANSHIP, MATERIAL AND FINISH AND SHALL MATCH ACCURATELY ALL SURROUNDING CONSTRUCTION IN A MANNER SATISFACTORY TO THE ARCHITECT.

EXISTING UTILITIES, ETC. THAT ARE DAMAGED DURING THE CONSTRUCTION PERIOD, WHETHER OR NOT DUE TO NEGLIGENCE SHALL BE REPAIRED OR REPLACED AND LEFT IN A CONDITION SUITABLE TO THE ARCHITECT.

SLEEVES

PROVIDE SLEEVES TO PROTECT EQUIPMENT OR FACILITIES IN THE INSTALLATION. EACH SLEEVE SHALL EXTEND THROUGH ITS RESPECTIVE FLOOR, WALL OR PARTITION AND SHALL BE CUT FLUSH WITH EACH SURFACE EXCEPT SLEEVES THAT PENETRATE THE FLOOR, WHICH SHALL EXTEND 2" ABOVE THE FLOOR. COORDINATE THROUGH THE ARCHITECT ANY CORE DRILLING OR CUTTING OF OPENINGS IN MASONRY FLOORS OR WALLS.

ALL SLEEVES AND OPENINGS THROUGH FIRE RATED WALLS AND/OR FLOORS SHALL BE FIRE SEALED WITH CALCIUM SILICATE, SILICONE "RTV" FOAM, "3M" FIRE RATED SEALANTS OR EQUAL, SO AS TO RETAIN THEIR FIRE RATING.

SLEEVES IN BEARING AND MASONRY WALLS, FLOORS, AND PARTITIONS SHALL BE STANDARD WEIGHT STEEL PIPE FINISHED WITH SMOOTH EDGES. FOR OTHER THAN MASONRY PARTITIONS, THROUGH SUSPENDED CEILINGS, OR FOR CONCEALED VERTICAL PIPING, SLEEVES SHALL BE NO. 22 U.S.G. GALVANIZED STEEL MINIMUM.

HANGERS

HANGERS SHALL INCLUDE ALL MISCELLANEOUS STEEL SUCH AS ANGLE IRON, BANDS, C-CLAMPS WITH RETAINING CLIPS, CHANNELS, HANGER RODS, ETC., NECESSARY FOR THE INSTALLATION OF WORK.

HANGERS SHALL BE FASTENED TO BUILDING STEEL, CONCRETE, OR MASONRY, BUT NOT TO PIPING. HANGING FROM METAL DECK IS NOT PERMITTED. HANGERS MUST BE ATTACHED TO UPPER CHORD OF BAR JOIST. WHERE INTERFERENCES OCCUR, AND IN ORDER TO SUPPORT DUCTWORK OR PIPING, INSTALL TRAPEZE TYPE HANGERS OR SUPPORTS WHICH SHALL BE LOCATED WHERE THEY DO NOT INTERFERE WITH ACCESS TO FIRE DAMPERS, VALVES, AND OTHER EQUIPMENT. HANGER TYPES AND INSTALLATION METHODS ARE ALSO SUBJECT TO LANDLORD CRITERIA.

HANGERS FOR ALL INSULATED PIPING SHALL BE SIZED AND INSTALLED FOR THE OUTER DIAMETER OF INSULATION. INSTALL 6" LONG SPLIT CIRCLE GALVANIZED SADDLE BETWEEN THE HANGER AND THE PIPE INSULATION.

HANGERS AND PIPING OF DISSIMILAR METALS SHALL BE DI-ELECTRICALLY SEPARATED.

PROVIDE SWAY AND SEISMIC BRACING WHERE REQUIRED BY CODE.

JOB CONDITIONS

PROTECT MATERIALS, APPARATUS AND EQUIPMENT FROM DAMAGE, MOISTURE, DIRT, DEBRIS AND WORK OF OTHER TRADES.

OPERATION MANUALS AND INSTRUCTIONS

PROVIDE OPERATING AND MAINTENANCE INSTRUCTIONS AT THE COMPLETION OF THE PROJECT. SUBMIT THREE HARD BOUND COPIES TO ARCHITECT.

SCHEDULE A MEETING WITH THE OWNER'S REPRESENTATIVE AT THE SITE TO PROVIDE DETAILED INFORMATION ON THE OPERATING AND MAINTENANCE OF EQUIPMENT.

SUBMITTALS

SUBMIT WITHIN THIRTY (30) DAYS AFTER THE DATE OF NOTICE TO PROCEED AND BEFORE PURCHASING ANY MATERIALS OR EQUIPMENT, SUBMIT TO THE ARCHITECT FOR REVIEW, A COMPLETE LIST, IN SIX (6) COPIES, OF ALL MATERIALS INCORPORATED IN THE WORK. THIS LISTING SHALL BE ARRANGED BY THE ORDER OF OCCURRENCE IN THE SPECIFICATIONS, FOLLOWED BY THE ITEMS ON THE DRAWING NOT SPECIFICALLY INCLUDED IN THE SPECIFICATIONS.

AFTER THE LIST HAS BEEN PROCESSED BY THE ARCHITECT, SUBMIT COMPLETE SHOP DRAWINGS AND PRODUCT DATA OF ALL EQUIPMENT. THESE SUBMITTALS SHALL BE SUBMITTED WITHIN THIRTY (30) DAYS AFTER THE PROCESSING DATE OF THE ORIGINAL SUBMITTAL LIST. SUBMISSIONS SHALL BE MADE EARLY ENOUGH IN PROJECT TO ALLOW FOR (10) WORKING DAYS FOR REVIEW BY ARCHITECT-ENGINEER WITHOUT CAUSING DELAYS OR CONFLICTS IN THE PROJECT'S PROGRESS.

ALL SUBMITTALS SHALL BE COMPLETE AND SHALL BE IN THREE-RING, LOOSE -LEAF BINDERS, NO CONSIDERATION WILL BE GIVEN TO PARTIAL SUBMITTALS, UNLESS NOTED OTHERWISE BY ARCHITECT. EACH ITEM SHALL HAVE A COVER PAGE STATING PROJECT, SPECIFICATION AND PARAGRAPH REFERENCE NUMBER, OR DRAWING REFERENCE NUMBER, AND SCHEDULED EQUIPMENT IDENTIFICATION NUMBER, IF APPLICABLE.

THE REVIEW OF SUBMITTALS DOES NOT RELIEVE RESPONSIBILITY OF SHOP DRAWING ERRORS IN DETAILS, SIZES, QUANTITIES, WIRING DIAGRAM ARRANGEMENTS AND DIMENSIONS WHICH DEVIATE FROM THE SPECIFICATIONS, CONTRACT DRAWINGS AND/OR JOB CONDITIONS AS THEY EXIST.

IF APPARATUS OR MATERIALS ARE SUBSTITUTED FOR THOSE SPECIFIED UNDER THIS SECTION, AND SUCH SUBSTITUTIONS NECESSITATE CHANGES IN OR ADDITIONAL CONNECTIONS, PIPING SUPPORTS OR CONSTRUCTIONS, SAME SHALL BE PROVIDE AT NO ADDITIONAL COST TO THE OWNER. ASSUME COST AND ENTIRE RESPONSIBILITY THEREOF. ARCHITECT'S PERMISSION TO MAKE SUCH SUBSTITUTION SHALL NOT RELIEVE FULL RESPONSIBILITY FOR WORK.

TEST AND BALANCE REPORT: SUBMIT AT FINAL INSPECTION OPERATION AND MAINTENANCE MANUALS: SUBMIT COPIES IN COMPLIANCE WITH SECTION, OPERATION AND MAINTENANCE MANUALS.

15400 - HEATING VENTILATION AND & AIR CONDITIONING

PRODUCTS:

ALL MATERIALS AND EQUIPMENT SHALL BE NEW. SYSTEMS SHALL FUNCTION CORRECTLY AS A WHOLE, AND IN ALL ITS PARTS, UP TO THE SPECIFIED CAPACITY. SYSTEMS OR DEVICES FAILING TO MEET PERFORMANCE REQUIREMENTS SHALL BE REPLACED, ALTERED OR REPAIRED AS REQUIRED TO BRING PERFORMANCE UP TO SPECIFIED REQUIREMENTS. WORK DAMAGED OR MARRED BY SUCH REPLACEMENTS, ALTERATIONS, OR REPAIRS SHALL BE RESTORED TO PRIOR CONDITIONS, AT NO ADDITIONAL COST TO THE OWNER. WHERE MULTIPLE ITEMS OF EQUIPMENT OR MATERIALS ARE REQUIRED, THEY SHALL BE THE PRODUCT OF A SINGLE MANUFACTURER. BEFORE ORDERING EQUIPMENT, THE PHYSICAL DIMENSIONS SHALL BE CHECKED TO VERIFY FIT IN SPACES ALLOTTED ON THE DRAWINGS. INSERTS, PIPE SLEEVES, AND SUPPORTS OF AIR CONDITIONING EQUIPMENT SHALL BE PROVIDED AS SPECIFIED. WHERE SUCH ITEMS ARE TO BE SET OR EMBEDDED IN CONCRETE, MASONRY OR SIMILAR WORK, THE ITEMS SHALL BE FURNISHED AT THE PROPER TIME FOR SETTING OR EMBEDMENT SO AS TO CAUSE NO DELAY. DUCTWORK AND EQUIPMENT ASSEMBLIES SHOWN ON THE DRAWINGS ARE DIAGRAMMATIC. ADDITIONAL DUCTWORK AND APPURTENANCES REQUIRED FOR PROPER OPERATION OF EQUIPMENT SHALL BE PROVIDED BY THE CONTRACTOR AT NO ADDITIONAL COST.

MANUFACTURER'S NAMES AND CATALOG NUMBERS

SPECIFIC REFERENCES HAVE BEEN MADE TO ONE OR MORE MANUFACTURER'S NAMES AND MODEL OR CATALOG NUMBERS. THIS DOES NOT INDICATE THAT THE MATERIAL AND EQUIPMENT SPECIFIED IS NECESSARILY AN "OFF THE SHELF" ITEM; REQUIREMENTS FOR SPECIFIC FINISHES, MATERIALS OR OTHER MODIFICATIONS MAY INTRODUCE VARIANCES FROM MANUFACTURER'S STANDARDS. ASCERTAIN THAT SUCH MODIFICATIONS ARE FULLY CONSIDERED.

DIAGRAMS, NAMEPLATES AND LABELS

EACH MAJOR COMPONENT OF EQUIPMENT SHALL HAVE THE MANUFACTURER'S NAME, ADDRESS AND CATALOG NUMBER ON A PLATE SECURELY AFFIXED IN A CONSPICUOUS PLACE. THE NAMEPLATE OF A DISTRIBUTING AGENT WILL NOT BE ACCEPTED. ALL PIECES OF EQUIPMENT, VALVES, STARTERS, DISCONNECTS, AND ALL PNEUMATIC AND ELECTRIC CONTROL INSTRUMENTS AND APPARATUS SHALL BE IDENTIFIED WITH 1/16" THICK BLACK LAMINATED PLASTIC NAMEPLATES, WITH 3/16" HIGH WHITE LAMINATED LETTERS. SIMILAR AND LIKE EQUIPMENT SHALL BE DESIGNATED WITH NUMERICAL SUFFIX (EXAMPLE: THERMOSTAT, T-1). THE NAMEPLATE IDENTIFICATIONS SHALL COINCIDE WITH ITEMS APPEARING ON DIAGRAMS. PROVIDE A LABEL FOR THE MECHANICAL SYSTEM STATING: (NAME, ADDRESS AND PHONE NUMBER OF CONTRACTOR). LETTERS SHALL BE 1/4" HIGH AND LOCATED IN A CONSPICUOUS PLACE NEAR THE HVAC EQUIPMENT.

EXECUTION

INSTALLATION AND WORKMANSHIP

THE WORK SHALL BE PERFORMED BY QUALIFIED MECHANICS. ALL MATERIALS, APPARATUS AND EQUIPMENT SHALL BE INSTALLED IN NEAT, WORKMANLIKE MANNER. MATERIALS, DEVICES OR EQUIPMENT WHICH, IN THE OPINION OF THE ARCHITECT-ENGINEER, IS IMPROPERLY INSTALLED SHALL BE REMOVED AND REINSTALLED IN AN APPROVED MANNER AT NO ADDITIONAL COST TO THE OWNER. THE WORK SHALL BE COORDINATED WITH THE WORK OF OTHER TRADES. WHERE THE WORK IS DEPENDENT UPON WORK OF OTHER TRADES OR WORK ALREADY IN PLACE, SUCH OTHER WORK AND WORK IN PLACE SHALL BE EXAMINED AND SHALL BE IN PROPER CONDITION AND STATE OF COMPLETION BEFORE CONTINUING THE INSTALLATION. THE INSTALLATION OF WORK SHALL, IN GENERAL, BE AS HIGH AS POSSIBLE AND LOCATED IN ACCORDANCE WITH THE DRAWINGS. DUCTWORK INDICATED SHALL BE FOLLOWED AS ACCURATELY AS POSSIBLE. ANY NECESSARY DEVIATIONS SHALL BE CALLED TO THE ATTENTION OF THE ARCHITECT-ENGINEER. PROVIDE DRAWINGS SHOWING PROPOSED CHANGES. APPROVAL IS REQUIRED BEFORE CHANGES SHALL TAKE EFFECT.

CUTTING AND PATCHING

LAYOUT OPENINGS FOR CUTTING BY OTHER TRADES AS REQUIRED. CUTTING OF STEEL, CONCRETE OR ANY OTHER STRUCTURAL PART MUST BE APPROVED IN WRITING BY ARCHITECT-ENGINEER PRIOR TO CUTTING.

WATERPROOFING

DO NOT CUT OR PENETRATE WATERPROOFED SURFACES, OR WATERPROOFING MEMBRANES, WITHOUT FIRST MAKING ARRANGEMENTS FOR REPAIR BY A METHOD APPROVED BY ARCHITECT-ENGINEER.

PROVIDE ALL NECESSARY FLASHING AND COUNTERFLASHING TO MAINTAIN THE WATERPROOFING INTEGRITY OF THIS BUILDING AS REQUIRED BY THE INSTALLATION OR REMOVAL OF PIPES, DUCTS, LOUVERS, CONDUIT, AND EQUIPMENT. PROVIDE EQUIPMENT CURBS AND DUNNAGE STEEL AS REQUIRED.

ELECTRICAL WORK

POWER WIRING FROM PANELS TO MOTOR CONTROLLERS AND FROM CONTROLLERS TO MOTORS IS SPECIFIED IN DIVISION 16. MOTOR STARTERS NOT SPECIFIED TO BE FURNISHED WITH THE MOTORS FROM THE FACTORY ARE SPECIFIED IN DIVISION 16. SUBMIT WIRING DIAGRAMS FOR APPROVAL AND FURNISH APPROVED DIAGRAMS TO THE ELECTRICAL CONTRACTOR FOR COORDINATION. ELECTRICAL CONTROL WIRING FOR CONNECTION OF TEMPERATURE CONTROLLERS, PUSH BUTTONS, INTERLOCKS IN MOTOR CONTROLLERS, AND LIKE ITEMS IS SPECIFIED IN THE CONTROL SECTION(S) IN THIS DIVISION. FURNISH ALL EQUIPMENT WITH COMPLETE INTERNAL CONTROL WIRING. ELECTRICAL WORK SPECIFIED IN THIS DIVISION SHALL CONFORM TO APPLICABLE PROVISIONS OF DIVISION 16. ALL CONTROL WIRING SHALL BE IN CONDUIT. PROVIDE MOTORS CONFORMING TO CHARACTERISTICS SHOWN ON ELECTRICAL DRAWINGS.

ACCESS DOORS (ACCESS PANELS)

PROVIDE ACCESS REQUIRED FOR MAINTENANCE, ADJUSTMENT, REMOVAL AND REPAIR OF VALVES, CONTROLS, DAMPERS, EQUIPMENT AND LIKE ITEMS. PROVIDE ACCESS DOORS (ACCESS PANELS) CONFORMING TO REQUIREMENTS OF DIVISION 8 SPECIFICATIONS. PANELS SHALL BE LOCATED TO MAKE ALL ITEMS EASILY ACCESSIBLE.

CLEAN UP

REFER TO GENERAL CONDITIONS FOR CLEAN-UP. CLEAN ALL MATERIALS AND EQUIPMENT OF DIRT, DUST, PAINT, SPOTS AND STAINS, SOIL MARKS AND OTHER FOREIGN MATTER.

FINAL INSPECTION

GIVE NOTICE TO THE ARCHITECT-ENGINEER THAT THE WORK IS READY FOR FINAL INSPECTION.

1. SUBMIT TEST AND BALANCE REPORT AND COMPLETE REQUIREMENTS AS NOTED.
2. SUBMIT LETTER FROM CONTROL MANUFACTURER CERTIFYING THAT CONTROLS HAVE BEEN CHECKED FOR OPERATION AND CALIBRATION, AND THAT THE SYSTEM IS OPERATING AS INTENDED.

FURNISH NECESSARY MECHANICS TO OPERATE SYSTEM, MAKE NECESSARY ADJUSTMENTS AND ASSIST WITH FINAL INSPECTION.

INSTRUCTION OF OWNER'S OPERATING PERSONNEL

INCLUDE THE COST OF THE SERVICES OF QUALIFIED INSTRUCTOR(S) TO INSTRUCT THE OWNER'S OPERATING PERSONNEL IN THE OPERATION, ADJUSTMENT, CARE AND MAINTENANCE OF ALL HVAC EQUIPMENT AND SYSTEMS. INSTRUCTION SHALL BE PERFORMED AT A TIME APPROVED BY THE OWNER AND AFTER ALL HVAC EQUIPMENT AND SYSTEMS ARE INSTALLED, COMPLETE, ADJUSTED AND OPERATING TO SPECIFIED REQUIREMENTS. NOTIFY THE ARCHITECT-ENGINEER WHEN INSTRUCTIONS WILL BE GIVEN. QUALIFICATIONS OF INSTRUCTORS SHALL BE SUBJECT TO APPROVAL OF THE OWNER AND EQUIPMENT MANUFACTURER. ADDITIONAL REQUIREMENTS CONCERNING OPERATION AND MAINTENANCE OF MECHANICAL EQUIPMENT AND SYSTEMS MAY BE SPECIFIED IN OTHER SECTIONS. TWO COPIES OF ACKNOWLEDGMENT OF ALL REQUIRED INSTRUCTIONS TO OWNER'S OPERATING PERSONNEL, SIGNED BY THE OWNER OR HIS AUTHORIZED REPRESENTATIVE, SHALL BE SUBMITTED TO THE ARCHITECT-ENGINEER PRIOR TO SUBMITTING APPLICATION FOR FINAL PAYMENT. AN ADDITIONAL COPY OF THIS ACKNOWLEDGMENT IS REQUIRED IN EACH COPY OF OPERATION AND MAINTENANCE MANUALS REQUIRED IN THE SECTION, OPERATION AND MAINTENANCE MANUALS.

OPERATION AND MAINTENANCE MANUALS

FURNISH THREE COPIES OF COMPLETE OPERATION AND MAINTENANCE MANUALS TO THE ARCHITECT-ENGINEER, FOR APPROVAL AND FOR THE OWNER, ON ALL EQUIPMENT AND SYSTEMS. THE MANUALS SHALL BE BOUND IN HARD-BACK, THREE RING LOOSE-LEAF BINDERS. MANUALS SHALL CONTAIN A TITLE SHEET WITH JOB NAME, AND THE NAMES, ADDRESSES AND PHONE NUMBERS OF THE CONTRACTOR, SUBCONTRACTOR, CONTROL SUBCONTRACTOR, RELATED CONTRACTORS AND MATERIAL AND EQUIPMENT SUPPLIERS.

A COPY OF ACKNOWLEDGMENT OF INSTRUCTION TO THE OWNER'S OPERATING PERSONNEL IN THE OPERATION OF ALL MECHANICAL EQUIPMENT AND SYSTEMS, SIGNED BY THE OWNER OR HIS AUTHORIZED REPRESENTATIVE. TYPEWRITTEN OPERATING INSTRUCTIONS FOR THE OWNER'S PERSONNEL DESCRIBING HOW TO STOP AND START EACH PIECE OF EQUIPMENT; HOW TO SET THE TEMPERATURE CONTROL SYSTEM FOR NORMAL OPERATION AND NORMAL RESTARTING PROCEDURES, CAUTION AND WARNING NOTICES. APPROVED SHOP DRAWINGS, PRODUCT DATA AND PARTS AND MAINTENANCE BOOKLET FOR EACH ITEM OF MATERIAL AND EQUIPMENT FURNISHED UNDER DIVISION 15000. RECORD DRAWINGS OF ALL SYSTEMS INCLUDING ELECTRICAL AND CONTROL DIAGRAMS. TEST AND BALANCE REPORT. COPIES OF CERTIFICATES OF INSPECTION. GUARANTEES, INCLUDING EXTENDED GUARANTEES.

DELIVER THE MANUALS TO THE OWNER PRIOR TO SUBMITTING APPLICATION FOR FINAL PAYMENT.

HVAC/HYDRONIC PIPING

CONDENSATE DRAIN

PROVIDE CONDENSATE DRAINS FOR ALL AIR CONDITIONING UNITS AND PIPE AS DENOTED ON DRAWINGS. CONDENSATE DRAIN PIPING SHALL BE INSTALLED WITH TRAP AT THE COIL CONNECTION AND SHALL HAVE A MINIMUM SEAL DEPTH EQUAL TO THE RESPECTIVE AIR HANDLING UNIT FAN STATIC PRESSURE. DEPTH SHALL BE A MINIMUM OF 2".

HVAC INSULATION

LOW PRESSURE DUCTWORK INSULATION

EXTERNAL INSULATION SHALL BE R-6 MINIMUM SCHULLER TYPE SMALLLITE, FSK SPIN-GLAS OR APPROVED EQUAL WITH AN EMBOSSED ALUMINUM FOIL FACING. INTERNAL INSULATION SHALL BE R-6 MINIMUM LINER WITH A COATED AIR SIDE SURFACE TO PREVENT EROSION. APPLY ADHESIVES AND FASTENERS PER SMACNA AND THE MANUFACTURER. ALL TRANSVERSE EDGES TO BE COATED WITH ADHESIVE. ALL CONCEALED DUCTWORK SHALL HAVE EXTERNAL INSULATION, UNCONCEALED DUCTWORK SHALL BE INTERNALLY LINED. DUCTWORK INSTALLED IN UNCONDITIONED SPACES SHALL BE R-12 MINIMUM SCHULLER TYPE SMALLLITE, FSK SPIN-GLAS OR APPROVED EQUAL WITH AN EMBOSSED ALUMINUM FOIL FACING.

ALL AIR SUPPLY DIFFUSERS BACKS AND NECKS, SHALL BE INSULATED WITH R-6 MINIMUM MANVILLE R-SERIES SMALLITE, OR APPROVED EQUAL FIBERGLASS BLANKET INSULATION.

ADHESIVES, MASTIC, SEALANTS

ADHESIVE SHALL BE FOSTER'S 85-20. STUDWELD PINS SHALL BE SEALED WITH FOSTER'S 30-36 ADHESIVE. ALL JOINTS, SEAMS AND BREAKS IN THE VAPOR BARRIER SHALL BE SEALED WITH FOSTER'S 35-00, REINFORCED WITH 4 INCH WIDE GLASS FABRIC.

TERMINAL HEAT TRANSFER UNITS

DESCRIPTION

INSTALL AIR CONDITIONING UNITS OF THE CAPACITIES INDICATED, COMPLETE WITH GAS-FIRED HEATING SYSTEM, WHERE INDICATED ON THE DRAWINGS. UNIT SHALL BE CONSTRUCTED IN ACCORDANCE WITH APPLICABLE ASME AND ANSI CODES AND SHALL BE LISTED BY UNDERWRITER'S LABORATORIES. UNIT SHALL BE RATED IN ACCORDANCE WITH THE LATEST ARI STANDARD 21. WHERE SPECIFIED OPERATING CONDITIONS ARE OTHER THAN ARI STANDARD CONDITIONS, CAPACITIES SHALL BE INTERPOLATED FROM ARI CONDITIONS.

MANUFACTURER

UNITS SHALL BE TRANE, LENNOX, AAON OR APPROVED EQUAL.

EXHAUST FANS

INLINE EXHAUST FAN

INSTALL DIRECT DRIVE CENTRIFUGAL INLINE EXHAUST FAN BY GREENHECK OR APPROVED EQUAL WITH GALVANIZED STEEL HOUSING, BACKWARD INCLINED ALUMINUM WHEEL, ACCESS PANELS, INTEGRAL DUCT CONNECTION FLANGES, BALL BEARING MOTORS, AND CORROSION RESISTANT FASTENERS. FAN SHALL COME INSTALLED WITH NEMA-1 TOGGLE SWITCH, MOUNTED AND WIRED. SOLID STATE SPEED CONTROLLER SHIPPED LOOSE AND PSC MOTOR.

WATER SOURCE HEAT PUMPS

DESCRIPTION

INSTALL WATER SOURCE HEAT PUMP OF CAPACITIES INDICATED MANUFACTURED BY FLORIDA HEAT PUMP, MCQUAY OR AN APPROVED EQUAL. FACTORY ASSEMBLED AND RATED ACCORDING TO ARI-ISO13526-1. GALVANIZED-STEEL CASING WITH ACCESS PANELS FOR MAINTENANCE AND FILTER REPLACEMENT, KNOCKOUTS FOR ELECTRICAL AND PIPING CONNECTIONS, FLANGED DUCT CONNECTIONS AND CABINET INSULATION OF ½" THICK, MULTI DENSITY, COATED GLASS FIBER. THE UNIT SHALL BE DESIGNED TO OPERATE WITH ENTERING FLUID TEMPERATURES BETWEEN 50°F AND 100°F IN COOLING AND BETWEEN 50°F AND 80°F IN HEATING.

THE UNITS SHALL BE WARRANTED BY THE MANUFACTURER AGAINST DEFECTS IN MATERIALS AND WORKMANSHIP FOR A PERIOD OF ONE (1) YEAR ON ALL PARTS AND FIVE (5) YEARS ON COMPRESSOR.

REFRIGERATION CIRCUITS SHALL UTILIZE R-410A. THE UNIT SHALL CONTAIN SEALED REFRIGERANT CIRCUITS INCLUDING HERMETIC COMPRESSORS, THERMAL EXPANSION VALVE METERING DEVICES, REFRIGERANT DRIER, FINED TUBE AIR-TO-REFRIGERANT HEAT EXCHANGERS, REFRIGERANT REVERSING VALVES AND SERVICE PORTS. COMPRESSORS SHALL BE HIGH EFFICIENCY, DESIGNED FOR HEAT PUMP DUTY, INTERNALLY SPRING ISOLATED (EXCEPT FOR SCROLL TYPE COMPRESSORS) FOR MAXIMUM SOUND ATTENUATION AND MOUNTED ON RUBBER VIBRATION ISOLATORS. COMPRESSOR MOTORS SHALL BE EQUIPPED WITH OVERLOAD PROTECTION. THE FINNED TUBE COIL SHALL BE CONSTRUCTED OF LANCED ALUMINUM FINS NOT EXCEEDING 14 FINS PER INCH. COILS SHALL HAVE A BAKED POLYESTER ENAMEL COATING FOR PROTECTION AGAINST MOST AIRBORNE CHEMICALS. THE COAXIAL WATER-TO-REFRIGERANT HEAT EXCHANGERS SHALL BE CONSTRUCTED OF A CONVOLUTED COPPER INNER TUBE AND STEEL OUTER TUBE WITH A DESIGNED REFRIGERANT WORKING PRESSURE OF 450 PSIG AND A DESIGNED WATER SIDE WORKING PRESSURE OF NO LESS THAN 400 PSIG.

UNITS 6 TONS AND LARGER: THE FANS SHALL BE BELT DRIVEN FORWARD CURVE TYPE WITH DYNAMICALLY BALANCED WHEEL(S). THE FAN HOUSINGS SHALL BE REMOVABLE FROM THE UNIT WITHOUT DISCONNECTING THE SUPPLY AIR DUCTWORK FOR SERVICING OF FAN MOTORS. MOTORS SHALL BE PERMANENTLY LUBRICATED AND HAVE THERMAL OVERLOAD PROTECTION.

UNITS SMALLER THAN 6 TONS: THE FAN SHALL BE DIRECT DRIVE CENTRIFUGAL FORWARD CURVED TYPE WITH A DYNAMICALLY BALANCED WHEEL. FAN HOUSE SHALL BE REMOVABLE FROM UNIT WITHOUT DISCONNECTING THE SUPPLY AIR DUCTWORK FOR SERVICING OF FAN MOTOR. THE MOTOR SHALL BE THREE SPEED PSC TYPE AND BE PERMANENTLY LUBRICATED AND HAVE THERMAL OVERLOAD PROTECTION.

DUCTWORK, LOW PRESSURE, GALVANIZED STEEL

QUALITY ASSURANCE

DUCTS SHALL BE CONSTRUCTED AND INSTALLED IN ACCORDANCE WITH "HVAC DUCT CONSTRUCTION STANDARDS" PUBLISHED BY THE SHEET METAL AND AIR CONDITIONING CONTRACTORS NATIONAL ASSOCIATION, INC. (SMACNA)

JOB CONDITIONS

INSPECT THE DRAWINGS AND VERIFY EXISTING CONDITIONS IN THE FIELD. REPORT CONFLICTS BEFORE STARTING FABRICATION.

DUCT MATERIAL

WEIGHTS AND GAGES SHALL BE IN ACCORDANCE WITH TABLE I OF "HVAC DUCT CONSTRUCTION STANDARDS" PUBLISHED BY SMACNA. DUCT MATERIAL SHALL BE GALVANIZED STEEL.

SPLITTER DAMPERS

SPLITTERS SHALL BE 18 GAGE GALVANIZED STEEL WITH HORIZONTAL AND VERTICAL DIMENSIONS SUFFICIENT TO CLOSE OFF AIR TO BRANCH. PROVIDE VENTLOK NO. 607 END BEARINGS AND VENTLOK NO. 690 DAMPER ASSEMBLY.

VOLUME DAMPERS

VOLUME DAMPERS SHALL BE 18 GAGE STEEL; SINGLE BLADE UP TO 8" X 8", OPPOSED BLADE ON ALL DUCTS OVER 8" X 8". PROVIDE VENTLOK NO. 607 END BEARINGS AND VENTLOK NO. 641 SELF-LOCKING REGULATOR. DAMPER RODS SHALL BE 1/2" SQUARE BARS WITH BLADES SECURELY RIVETED TO BAR.

TURNING VANES

SQUARE AND RECTANGULAR ELBOWS SHALL CONTAIN TITUS NO. AG-225 TURNING VANES.

HANGERS

IN ACCORDANCE WITH CHAPTER IV OF SMACNA.

FLEXIBLE CONNECTIONS

FLEXIBLE CONNECTIONS SHALL BE PROVIDED FOR EACH AIR HANDLING DEVICE TO PREVENT TRANSMISSION OF VIBRATIONS. MAKE FLEXIBLE CONNECTION A MINIMUM OF 4 INCHES WIDE OF VENTGLAS AS MADE BY VENTFABRICS, INC.

INSTALLATION

GENERAL: SPLIT, DIVIDE OR TURN DUCTS AS NECESSARY TO AVOID OBSTRUCTIONS AND, IN SUCH CASES, PROVIDE AIR STREAM DEFLECTORS AND INCREASE SIZE OF DUCT TO AN EQUIVALENT AREA.

SPLITTERS: RIGIDLY ATTACH SPLITTERS TO PIVOT ROD AND OPERATING LINKAGE. SET DAMPER ASSEMBLY ON RAISED INSULATED BASE ON INSULATED DUCTWORK. VOLUME

DAMPERS: SUPPLY AND MAKE-UP AIR DUCTWORK IN CONCEALED SPACES. SET REGULATOR ON RAISED BASE ON INSULATED DUCTWORK. MARK END OF DAMPER ROD TO SHOW DAMPER POSITION.

FLEXIBLE CONNECTIONS: SECURE FLEXIBLE CONNECTIONS TO DUCT AND UNIT WITH GALVANIZED STEEL STRAPS HOLDING THE MATERIAL IN FORMED GALVANIZED STEEL CHANNELS. TEST TO ENSURE PROPER INSTALLATION.

PLUGS: PROVIDE SQUARE HEAD TYPE TEST PLUGS AS REQUIRED FOR INSERTION OF TEST APPARATUS. PROVIDE A RING AND A REMOVABLE INSULATION PLUG WHERE DUCTS ARE INSULATED.

PAINTING: PAINT INTERIOR OF DUCTWORK FLAT BLACK WHERE VISIBLE THROUGH GRILLES AND REGISTERS.

SEALING: DUCTWORK SHALL BE SEALED IN ACCORDANCE WITH SMACNA "SEAL CLASS B".

CORRECTIONS

REMOVE ALL DUCTWORK FOUND TO VIBRATE, CHATTER OR PULSATE AND REPLACE WITH NEW DUCTWORK.

DUCTWORK, LOW PRESSURE, FLEXIBLE

DESCRIPTION

PROVIDE WHERE INDICATED ON THE DRAWINGS AND SPECIFIED HEREIN, FACTORY FABRICATED AND PRE INSULATED FLEXIBLE DUCTS.

QUALITY ASSURANCE

FLEXIBLE DUCTS, INCLUDING INSULATION AND SEALANTS, SHALL CONFORM TO THE REQUIREMENTS OF NFPA 90A AND UL STANDARD 181 FOR CLASS 1 DUCTS. PERFORMANCE DATA SHALL BE BASED ON TEST PERFORMED IN ACCORDANCE WITH AIR DIFFUSION COUNCIL FLEXIBLE AIR DUCT TEST CODE FD72.

LOW PRESSURE FLEXIBLE DUCTWORK

LOW PRESSURE FLEXIBLE DUCTWORK SHALL CONSIST OF CORROSION RESISTANT SPRING STEEL HELIX BONDED TO A GLASS REINFORCED NEOPRENE SLEEVE INSULATED WITH A MINIMUM OF 1 INCH THICK, 1 POUND DENSITY FIBERGLASS INSULATION WHICH IS IN TURN COVERED WITH AN OUTER VAPOR BARRIER OF FIBER REINFORCED FOIL-SCRIM-KRAFT LAMINATE. INSULATION SHALL HAVE A THERMAL CONDUCTIVITY (K) NO GREATER THAN 0.25 AT 75 DEGREES F. DUCT FOR LOW VELOCITY SYSTEM CONNECTORS SHALL HAVE A WORKING PRESSURE OF NOT LESS THAN 1-1/2 INCHES OF WATER GAGE AND A MAXIMUM OPERATING TEMPERATURE OF NOT LESS THAN 250 DEGREES F.

DUCT CONNECTORS

WHERE FLEXIBLE DUCTS CONNECT TO LOW PRESSURE DUCTS TO FORM RUNOUTS TO INDIVIDUAL OUTLETS, PLENUMS OR LOW PRESSURE TERMINALS, PROVIDE FACTORY FABRICATED FITTINGS COMPLETE WITH MANUAL BALANCING DAMPERS HAVING LOCKING QUADRANTS. WHERE LOW PRESSURE DUCTS ARE INTERNALLY INSULATED THE CONNECTOR SHALL BE FURNISHED WITH AIR EXTENSION TO PROJECT THROUGH AND PROTECT THE INSULATION. FOR CONNECTION TO EQUIPMENT, AUXILIARY SLEEVES SHALL BE PROVIDED TO ALLOW AT LEAST 2 INCHES OF SURFACE FOR CLAMPING OF FLEXIBLE DUCTWORK. SLEEVES SHALL BE SCREWED OR BOLTED TO EQUIPMENT LIP FRAME.

CLAMPS

PROVIDE GALVANIZED SPRING STEEL CLAMPS OR PANDUIT STRAPS AT CONNECTIONS TO DUCT FITTINGS OR DEVICES.

MANUFACTURER

FLEXIBLE DUCTWORK AND COMPONENTS SHALL BE AS MANUFACTURED BY GENERAL ENVIRONMENTAL CORPORATION OR APPROVED EQUAL.

INSTALLATION

INSTALL DUCT CONNECTORS TO LOW PRESSURE DUCTS USING MANUFACTURER'S TEMPLATE FOR ALL HOLES AND SECURE THE CONNECTOR WITH SHEET METAL SCREWS HAVING FIRST APPLIED FOSTER'S 30-02 DUCT SEALANT TO THE ADJOINING SURFACES. DO NOT PRESSURIZE THE SYSTEM FOR 48 HOURS. STRETCH NEW DUCT WHEN REMOVING IT FROM CARTONS WHERE IT MAY HAVE BEEN SHIPPED IN A COMPRESSED STATE. USE THE MINIMUM LENGTH OF FLEXIBLE DUCT REQUIRED TO MAKE THE SPECIFIC CONNECTION UNLESS SPECIFICALLY NOTED OTHERWISE ON THE DRAWINGS. THE MAXIMUM DEVELOPED LENGTH OF FLEX DUCT IS 5'-0". AVOID SHARP BENDS. USE A MINIMUM INSIDE BEND RADIUS EQUAL TO (1) TIMES THE INSIDE DIAMETER OF THE DUCT. SUPPORT HORIZONTAL DUCT RUNS AS DETAILED IN THE CONSTRUCTION DOCUMENTS. ALLOW THE FLEXIBLE DUCT TO EXTEND STRAIGHT AWAY FROM CONNECTORS FOR A FEW INCHES PRIOR TO INITIATING ANY BEND. MAKE CONNECTIONS OF FLEXIBLE DUCT TO RIGID DUCT OR TERMINALS AS FOLLOWS:

1. APPLY FOSTER'S 30-02 SEALANT TO THE INSIDE OF THE FLEXIBLE DUCT TO DEPTH OF 3 INCHES.
2. SLIDE THE FLEXIBLE DUCT OVER THE CONNECTOR AND WRAP WITH MINIMUM OF TWO REVOLUTIONS OF REINFORCED FOIL DUCT TAPE STARTING ABOUT 2 INCHES BACK FROM END OF FLEXIBLE DUCT AND SEALING OVERLAP WITH LAST WRAP.
3. PLACE A CLAMP OR STRAP OVER THE TAPED END AND SECURE FIRMLY.
4. REPAIR ALL DAMAGE TO VAPOR BARRIER WITH FOSTER'S 35-00 REINFORCED WITH 4 INCH WIDE GLASS FABRIC AND A SECOND COAT OF FOSTER'S 35-00.

AIR DISTRIBUTION DEVICES

DESCRIPTION

AIR DISTRIBUTION DEVICES SHALL BE PROVIDED TO DELIVER THE INDICATED VOLUME OF SUPPLY AIR WITHOUT EXCEEDING THE NC RATING AS FOLLOWS:
EMPLOYEE AND CUSTOMER AREAS: NC-30.

DIFFUSERS. GRILLES AND REGISTERS

MANUFACTURER SHALL BE TITUS OR APPROVED EQUIVALENT. FOR MODEL NUMBERS AND TYPES SEE AIR DISTRIBUTION SCHEDULE ON DRAWING. DIFFUSERS, GRILLES, AND REGISTERS SHALL BE OF THE SURFACE, FLUSH, OR LAY-IN MOUNTING CORRESPONDING TO THE CEILING IN WHICH THEY ARE LOCATED. THE FINISH OF THE DIFFUSERS, GRILLE, OR REGISTER FACE PANEL SHALL BE BAKED ENAMEL, OFF WHITE COLOR. WHERE MOUNTING SCREWS ARE REQUIRED IN AIR DISTRIBUTION DEVICES, THEY SHALL BE FINISHED TO MATCH THE ADJACENT SURFACE OF THE DEVICES. SUPPLY AND RETURN GRILLES AND REGISTERS WHICH ARE SURFACE MOUNTED SHALL BE PROVIDED WITH SPONGE RUBBER GASKETED FRAMES TO PREVENT SMUDGING.

DRAINABLE LOUVERS

MANUFACTURER SHALL BE RUSKIN OR APPROVED EQUAL. FOR MODEL NUMBER AND TYPE SEE DRAWING. LOUVER FINISH SHALL BE SANDSTONE COLORED BAKED ENAMEL CONTAINING 50% KYNAR RESINS. LOUVER SHALL INCLUDE GASKETED BACKDRAFT DAMPERS WITH ADJUSTABLE WEIGHTS OR SPRINGS TO PREVENT OUTWARD AIR FLOW. ADJUST AS DIRECTED BY OWNER OR AUTHORITY HAVING JURISDICTION.

INSTALLATION

INSTALL WHERE SHOWN ON DRAWINGS. DIFFUSERS, REGISTERS AND FITTINGS SHALL BE SECURELY ATTACHED TO FINISH SURFACES, OR STRUCTURAL MEMBERS BEHIND FINISH SURFACES. LAY-IN DIFFUSERS MOUNTED IN ACOUSTICAL TILE CEILINGS SHALL BE RIGIDLY MOUNTED, ABOVE THE FACE PANEL, TO THE CEILING SUSPENSION SYSTEM. DRAINABLE LOUVERS SHALL BE INSTALLED AS RECOMMENDED BY MANUFACTURER.

CONTROLS, ELECTRIC

DESCRIPTION

THE WORK CONSISTS OF INSTALLING CONTROLS FOR THE HVAC SYSTEM.

ELECTRICAL

ELECTRICAL WORK AND MATERIALS ASSOCIATED WITH THE CONTROL SYSTEM SHALL BE INSTALLED AS WORK OF THIS SECTION BUT IN ACCORDANCE WITH DIVISION 16. POWER WIRING IS SPECIFIED UNDER DIVISION 16 AND SHOWN ON ELECTRICAL DRAWINGS. ELECTRICAL CONTROL WIRING CONDUIT AND FITTINGS ASSOCIATED WITH THE SPACE TEMPERATURE AND HUMIDITY CONTROL INCLUDING INTERLOCKING WITH MOTOR CONTROLLERS, CONTROL ACCESSORIES AND APPURTENANCES ARE TO BE PROVIDED UNDER THIS SECTION. CONTROL WIRING SHALL BE IN CONDUIT IF REQUIRED BY LOCAL AUTHORITY HAVING JURISDICTION.

ELECTRIC ROOM THERMOSTATS

THERMOSTAT SHALL BE AS SPECIFIED IN THE DRAWINGS, THERMOSTATS FOR WATER SOURCE HEAT PUMPS SHALL HAVE AUTOMATIC HEATING/COOLING CHANGEOVER AND SHALL E PROVIDED WITH A LOCKABLE COVER.

SMOKE DETECTOR

SMOKE DETECTOR SHALL BE FURNISHED AND WIRED BY ELECTRICAL CONTRACTOR AND INSTALLED BY MECHANICAL CONTRACTOR AS SHOWN IN THE DRAWINGS. WIRING AND REMOTE ALARM INDICATOR FOR DUCT MOUNTED SMOKE DETECTOR SHALL BE BY ELECTRICAL CONTRACTOR. SMOKE DETECTOR SHALL BE POWERED AS SPECIFIED IN DRAWINGS.

TESTING, ADJUSTING AND BALANCING

TESTING, ADJUSTING AND BALANCING OF ALL WORK SHALL BE MADE BY AN INDEPENDENT CONTRACTOR, WHO IS A CURRENTLY LICENSED ASSOCIATED AIR BALANCING COUNCIL (AABC) OR NATIONAL ENVIRONMENTAL BALANCING BUREAU (NEBB) BALANCING CONTRACTOR. NO OTHER BALANCE REPORTS WILL BE REVIEWED OR ACCEPTED. ALL BALANCING WORK MUST BE COMPLETE AND DONE IN ACCORDANCE WITH THE MOST RECENT STANDARDS OF THEIR SOCIETY AND AS A MINIMUM SHALL INCLUDE THE INFORMATION AS SHOWN IN THE AIR BALANCE REVIEW CHECKLIST BELOW. PAYMENT OF ALL COSTS FOR TESTING AND BALANCING SHALL BE INCLUDED IN THE BID.

TESTING, ADJUSTING AND BALANCING REPORT MUST BE COMPLETE AND TURNED OVER TO TENANT'S PROJECT MANAGER ONE (1) WEEK PRIOR TO MERCHANDISING DATE. VERIFY THAT ALL EQUIPMENT AND SYSTEMS ARE COMPLETE AND OPERATIONAL ONE WEEK PRIOR TO FINAL BALANCING. IF ALL SYSTEMS ARE NOT OPERATIONAL AT THE TIME OF THE SCHEDULED BALANCING, ADDITIONAL TESTING AND BALANCING, INCLUDING ALL LABOR, TRAVEL EXPENSES, MEALS, HOTEL COSTS, ETC SHALL BE PERFORMED AT NO ADDITIONAL COST TO THE OWNER.

PRESENT FOR AIR BALANCE TO VERIFY ACCESSIBILITY TO ALL DEVICES, VERIFY ALL OPERATING SEQUENCES AND INSTALL NEW FILTERS IN ALL UNITS JUST PRIOR TO THE AIR BALANCE. ALLOW TWO DAYS ON SITE FOR BALANCING. THE COMPLETE AIR BALANCE SHALL TAKE PLACE WITH OUTSIDE AIR DAMPERS IN MINIMUM POSITION, EXCEPT AS NOTED OTHERWISE. INSTALL A NEW SET OF FILTERS ONE DAY PRIOR TO TURNOVER.

BALANCE AIR AND WATER QUANTITIES TO WITHIN +/- 10% OF THAT INDICATED ON THE DRAWINGS. ANY REQUIRED CHANGES IN SHEAVES, BELTS OR PULLEYS NEEDED TO ACHIEVE SPECIFIED FLOW RATES SHALL BE PERFORMED WITH NO ADDITIONAL COST TO THE OWNER. ALL CONTROL SEQUENCES SHALL BE TESTED (INTERLOCKED EQUIPMENT, SMOKE DETECTORS, SMOKE EVACUATION, ECONOMIZER, ETC.) AND OPERATING STATUS RECORDED IN THE REPORT.

SEVEN (7) COPIES OF THE BALANCE REPORT SHALL BE SUBMITTED FOR APPROVAL.

PERFORM ALL APPLICABLE TESTING AND BALANCING FUNCTIONS REQUIRED FOR THE SYSTEM DESIGNED ON THESE DRAWINGS. ALL SYSTEMS UNABLE TO BE COMPLETELY BALANCED AT THE TIME OF ORIGINAL BALANCE MUST BE BALANCED IN FUTURE AT NO ADDITIONAL EXPENSE TO THE OWNER. RECHECK ANY ITEMS THAT OWNER DEEMS NECESSARY AT NO ADDITIONAL COST TO OWNER.

THE BALANCE REPORT SHALL BE ON THE AABC NATIONAL STANDARD REPORT FORMS OR THE NEBB CERTIFIED REPORT FORMS AS PUBLISHED IN THEIR MOST CURRENT EDITIONS.

ARCHITECT
B+A ARCHITECTURE, LLC
600 BROADWAY BLVD, SUITE 290
KANSAS CITY, MO 64105
PH: 816-753-6100

MEP ENGINEER
ENGINEERING BUILDING SOLUTIONS
ADDRESS 1
CITY, STATE ZIP
PH: 913-735-5654

PARKVILLE BOBA TEA SHOP
CREEKSIDE COMMONS, PARKVILLE, MO

SEAL

NOT FOR CONSTRUCTION

ISSUED: MARCH 23, 2023

NO.	REVISION	DATE

DESIGNED BY TT
DRAWN BY LH
CHECKED BY HBD

THIS DRAWING IS THE PROPERTY OF B+A ARCHITECTURE AND IS NOT TO BE REPRODUCED OR COPIED IN WHOLE OR IN PART. IT IS ONLY TO BE USED FOR THE PROJECT AND SITE SPECIFICALLY IDENTIFIED HEREIN AND IS NOT TO BE USED ON ANY OTHER PROJECT.

SCALES AS STATED HEREIN ARE VALID ON THE ORIGINAL DRAWING ONLY. CONTRACTOR SHALL CAREFULLY REVIEW ALL DIMENSIONS AND CONDITIONS SHOWN HEREIN AND AT ONCE REPORT TO THE ARCHITECT ANY ERROR INCONSISTENCY OR OMISSION DISCOVERED.

M301

PLUMBING FIXTURE MINIMUM CONNECTION SCHEDULE

DESIGNATION	FIXTURE	C.W.	H.W.	DRAIN	VENT
WC	WATER CLOSET	1"	-	4"	2"
UR	URINAL	3/4"	-	2"	2"
LAV.	LAVATORY	1/2"	1/2"	2"	2"
EWC/DF	ELECTRIC WATER COOLER/DRINKING FOUNTAIN	1/2"	-	2"	2"
MB/SS	MOP BASIN/SERVICE SINK	1/2"	1/2"	3"	2"
SH/BT	SHOWER/BATHTUB	1/2"	1/2"	2"	2"
SK	SINK	1/2"	1/2"	2"	2"

GENERAL NOTES:

1. PITCH ALL DRAINAGE PIPING 3" AND LARGER AT 1/8" PER FOOT MINIMUM UNLESS OTHERWISE NOTED. PITCH ALL DRAINAGE PIPING 2-1/2" AND SMALLER AT 1/4" PER FOOT.
2. ALL UNDERGROUND DRAINAGE PIPING SHALL BE A MINIMUM OF 2" IN SIZE.
3. PROVIDE TRAP PRIMER UNITS FOR ALL FLOOR DRAINS.
4. VERIFY/COORDINATE LOCATIONS OF ALL FIXTURES, DRAIN, ETC. WITH ARCHITECT PRIOR TO ROUGH-IN.

GENERAL PLUMBING NOTES

1. ALL WORK SHALL BE IN CONFORMANCE WITH ALL APPLICABLE NATIONAL, STATE, AND LOCAL CODES AND AUTHORITIES HAVING JURISDICTION.
2. PROVIDE TO OWNER A COPY OF ALL REPORTS AND APPROVAL CERTIFICATES FROM LOCAL AND STATE INSPECTIONS AND ALL PLUMBING SYSTEMS EQUIPMENT MANUALS INCLUDING WARRANTIES.
3. COORDINATE THE COMPLETE INSTALLATION OF SYSTEMS TO AVOID CONFLICT WITH OTHER TRADES.
4. COORDINATE ALL ABOVE SLAB AND UNDER SLAB SANITARY, AND WATER PIPING SYSTEMS TO AVOID CONFLICT WITH ALL OTHER TRADES SYSTEMS, AND COLUMN FOOTINGS. ALL SOIL AND WASTE PIPING SHALL BE GRADED TO A UNIFORM SLOPE OF NOT LESS THAN 1/8" PER FOOT FOR PIPING 4" OR LARGER, AND NOT LESS THAN 1/4" PER FOOT FOR PIPING 3" OR SMALLER.
5. COORDINATE ALL FLOOR DRAINS, CLEANOUTS, AND FLOOR MOUNTED FIXTURES WITH FINISHED FLOOR SLAB ELEVATION TO ENSURE THEY ARE INSTALLED PLUM AND FLUSH WITHOUT CRACKS, RISE IN THE SLAB, OR VOIDS AROUND GRATES OR TOPS. ALL CLEANOUTS SHALL BE INSTALLED ALONG MAINS AT 50'-0" DISTANCE MAXIMUM. ALL FLOOR AND WALL CLEANOUTS SHALL BE ACCESSIBLE FOR MAINTENANCE AND NOT INSTALLED BENEATH EQUIPMENT. ANY DRAIN GRATES THAT ARE DAMAGED AS A RESULT OF OTHER CONSTRUCTION PRIOR TO RELEASE OF THE BUILDING TO THE OWNER SHALL BE REPLACED WITH LIKE GRATE AT NO EXPENSE OF THE OWNER.
6. ALL EXPOSED PIPES PENETRATING FINISHED WALLS SHALL BE EQUIPPED WITH WALL ESCUTCHEONS.
7. PROVIDE TRAP AND SEAL PRIMERS ON ALL FLOOR DRAINS IF REQUIRED BY CODE OR OWNER.
8. PLUMBING VENTS THROUGH THE ROOF ARE LOCATED AT A MINIMUM OF 5'-0" FROM BUILDING PARAPETS AND 10'-0" FROM FRESH AIR INTAKES AND AS REQUIRED TO MEET LOCAL CODES.
9. ALL SHUT-OFF OR BALANCING VALVES TO PLUMBING ROUTED IN PIPE CHASES SHALL BE ACCESSIBLE FROM CEILING AREA OR ACCESS DOORS PROVIDED IN WALL.
10. PROVIDE FINAL CONNECTIONS FOR ALL EQUIPMENT IN ACCORDANCE WITH MANUFACTURERS INSTRUCTIONS. PROVIDE ALL REQUIRED SHUT-OFFS, BACKFLOW PREVENTERS, PRESSURE REGULATORS, AND CONDENSATE DRAINS AS REQUIRED BY LOCAL CODES FOR COMPLETE EQUIPMENT INSTALLATION. CONSULT EQUIPMENT SUPPLIER OR OWNER FOR ADDITIONAL FINAL CONNECTION REQUIREMENTS NOT SHOWN ON THESE DRAWINGS.
11. CONTRACTOR TO FULLY INVESTIGATE ALL EXISTING PIPING TO REMAIN TO INSURE EXISTING PIPING IS IN GOOD REPAIR. IF ANY EXISTING PIPING IS FOUND TO BE DAMAGED REPLACE WITH LIKE.

PLUMBING ABBREVIATIONS

AD	AREA DRAIN, ACCESS DOOR	IE	INVERT ELEVATION
AFC	ABOVE FINISH CEILING	LAV	LAVATORY
AFG	ABOVE FINISH GRADE	MBH	1000 BTU PER HOUR
AHU	AIR HANDLING UNIT	N/A	NOT APPLICABLE
BFP	BACKFLOW PREVENTER	ORD	OVERFLOW ROOF DRAIN
BOP	BOTTOM OF PIPE	OST	STORM OVERFLOW
BOS	BOTTOM OF STRUCTURE	PD	PUMP DISCHARGE
CD	CONDENSATE	PIV	POST INDICATOR VALVE
CO	CLEANOUT	PRV	PRESSURE REDUCING VALVE
CW	DOMESTIC COLD WATER	REV	REVISION
DD	DECK DRAIN	RPM	REVOLUTIONS PER MINUTE
DN	DOWN	RTU	ROOF TOP UNIT
ETR	EXISTING TO REMAIN	SAN	SANITARY
EWC	ELECTRIC WATER COOLER	SCW	SOFT DOMESTIC COLD WATER
FCO	FLOOR CLEANOUT	SHW	SOFT DOMESTIC HOT WATER
FFA	FROM FLOOR ABOVE	SDHWR	SOFT RECIRC. HOT WATER
FP	FIRE PROTECTION	ST	STORM
FS	FLOOR SINK	TFA	TO FLOOR ABOVE
G	GAS (NATURAL)	TFB	TO FLOOR BELOW
GCO	GRADE CLEANOUT	TW	TEMPERED WATER
GPM	GALLONS PER MINUTE	UH	UNIT HEATER
HB	HOSE BIBB	V	VENT PIPE
HW	DOMESTIC HOT WATER	VTR	VENT THROUGH ROOF
HWR	HOT WATER RETURN	WC	WATER CLOSET
HWS	HOT WATER SUPPLY	WCO	WALL CLEANOUT
		WH	WALL HYDRANT

PLUMBING SYMBOLS

SYMBOL	DESCRIPTION	SYMBOL	DESCRIPTION
	GATE VALVE		FLOOR DRAIN / AREA DRAIN
	CHECK VALVE		FLOOR SINK
	PRESSURE	RD	ROOF DRAIN
	SOLENOID VALVE	ORD	OVERFLOW ROOF DRAIN
	GLOBE VALVE (STRAIGHT PATTERN)		HOT WATER RECIRCULATION PUMP
	BUTTERFLY VALVE	VTR	PLUMBING VEVT THRU ROOF
	BALL VALVE		POINT OF CONNECTION (CONNECT NEW TO EXISTING)
	GAS COCK	XXX	PLUMBING EQUIPMENT DESIGNATION
	PLUG VALVE	X X	PLUMBING RISER OR DETAIL DESIGNATION
FCO	FLOOR CLEAN OUT	S	SANITARY SEWER PIPING
WCO	WALL CLEAN OUT	ST	STORM SEWER PIPING
CO	CLEAN OUT	V	VENT PIPING
	HOSE BIBB	CW	COLD WATER PIPING
	FREEZE PROOF WALL HYDRANT	HW	HOT WATER PIPING
	ELBOW DOWN	HWR	HOT WATER RECIRCULATING PIPING
	ELBOW UP	FW	FILTERED WATER PIPING
	TEE UP	G	GAS PIPING
	TEE DOWN	CD	CONDENSATE PIPING
	STRAINER		
	UNION		
	CAP		

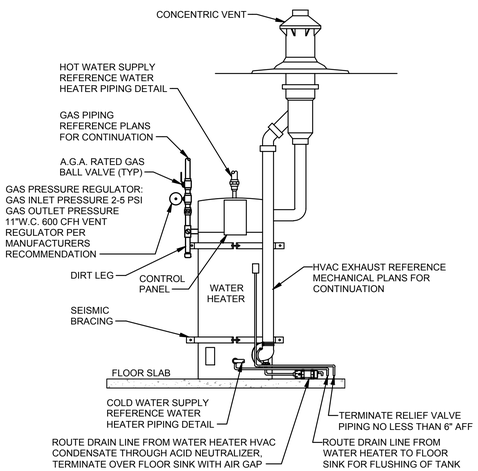

NOTES:

1. INSTALL PIPING & EQUIP. FOR WATER HEATERS W/ REQUIRED CLEARANCES TO ALLOW SPACE FOR REMOVAL & SERVICING AS SHOWN.
2. INSTALL WATER HEATERS PER MANUF. WRITTEN INSTRUCTIONS/RECOMMENDATIONS.
3. PLUMBING CONTRACTOR TO PROVIDE & INSTALL A COMBUSTION AIR INTAKE AND A EXHAUST FLUE.
4. ROUTE WATER HEATER FLUE CONDENSATE, AND P&T RELIEF AND DISCHARGE NEAR FLOOR SINK.
5. IF SEISMIC BRACING IS REQUIRED WATER HEATER SEISMIC RESTRAINT STRAPS TO BE 1-1/2" 24 GAGE CRS, GALVANIZED. SECURE TO WALL STUDS WITH #1/4-10 x 2-1/2" LAG SCREWS.

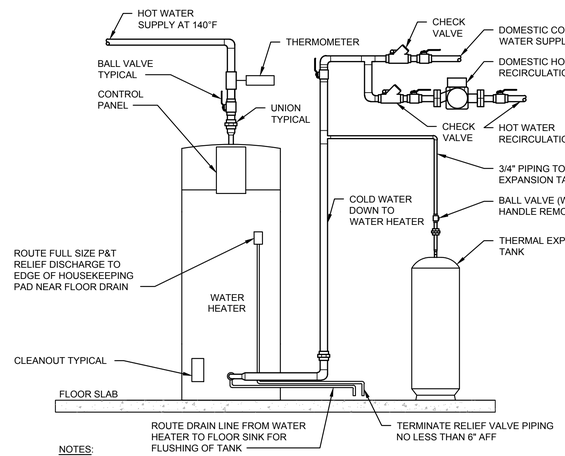

NOTES:

1. THERMOMETERS TO BE INSTALLED TO BE EASILY READABLE.
2. INSTALL PIPING & EQUIPMENT FOR WATER HEATER WITH REQUIRED CLEARANCES TO ALLOW SPACE FOR REMOVAL & SERVICING AS SHOWN.
3. PROVIDE SEPARATE SUPPORT FROM PIPING FOR RECIRCULATING PUMP.
4. INSTALL WATER HEATER PER MANUFACTURER'S WRITTEN INSTRUCTIONS/RECOMMENDATIONS.
5. ROUTE WATER HEATER P&T RELIEF AND DISCHARGE NEAR FLOOR SINK/DRAIN.
6. PROVIDE VACUUM RELIEF VALVE AS REQUIRED BY LOCAL CODE.
7. PIPE INSULATION NOT SHOWN FOR DRAWING CLARITY.

6 WATER HEATER PIPING
NOT TO SCALE

PLUMBING FIXTURE SCHEDULE

TAG	MANUFACTURER	MODEL	DRAIN	VENT	COLD WATER	HOT WATER	ELECTRICAL REQUIREMENTS	DESCRIPTION
BFP	WATTS	007M2QT-S			1-1/4"	1-1/4"		DOUBLE CHECK VALVE BACKFLOW PREVENTER WITH QUARTER TURN BALL VALVES AND BRONZE STRAINER.
FCO	SIOUX CHIEF	834-4ANR	4"	---	---	---		FLOOR CLEANOUT ABS BODY AND NICKEL-BRONZE COVER
FD	SIOUX CHIEF	832-35ANR	3"	2"	---	---		ADJUSTABLE FLOOR DRAIN WITH GRAY ABS BODY AND ROUND NICKEL-BRONZE STRAINER AND TRAP PRIMER CONNECTION.
FS	SIOUX CHIEF	861-3PN2W	3"	2"	---	---		PVC BODY FLOOR SINK WITH NICKEL BRONZE RING, HALF STRAINER AND STAINLESS STEEL MESH DEBRIS BASKET
LAV	KOHLER	K-2084	2"	1-1/2"	1/2"	1/2"		WALL MOUNT LAVATORY WITH K-97283-4 SINGLE-HOLE FAUCET 0.5 GPM. PROVIDE PRO TRAP WRAP AND ASSE 1070 COMPLIANT MIXING VALVE.
MS	STERN WILLIAMS	SB-802	3"	2"	3/4"	3/4"		PORTLAND CEMENT WITH MARBLE CHIPS MOP SINK WITH INTEGRAL CAST BRASS DRAIN AND STAINLESS STEEEL STRAINER. PROVIDE WITH T-10-VB FAUCET WITH VACUUM BREAKER AND T-35 HOSE WITH WALL HOOK
RP	TACO	007-SF5	---	---	---	1/2"	115V 0.76A 1/25HP	IN-LINE CARTRIDGE STYLE CIRCULATOR PUMP. CAPABLE OF 10 FEET OF HEAD AT 3 GPM
WC	KOHLER	K-3519-RA	3"	2"	3/4"	---		HIGHLINE WHITE WATER CLOSET WITH BEMIS #1655C WHITE OPEN FRONT SEAT LESS COVER PROVIDE WITH TRIP LEVER ON WIDE SIDE OF ROOM.
WCO	JAY R. SMITH	4531S	PER PLAN	---	---	---		CAST IRON CLEANOUT TEE AND COUNTERSUNK PLUG
GWH	BRADFORD WHITE	LC2PDV50H763N			1"	1"	120V 15A	NATURAL GAS FIRED WATER HEATER 50 GALLON 76 MBH 125 GALLON RECOVERY AT 100 %%DF RISE. 96% EFFICIENT PROVIDE WITH AMTROL ST-5 THERMAL EXPANSION TANK.

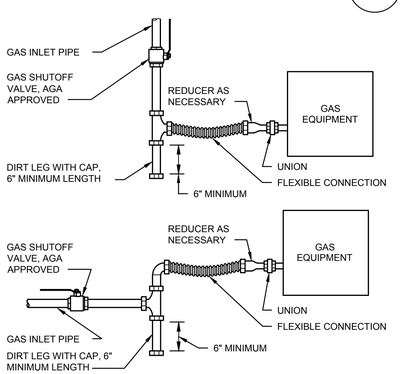

NOTES:

1. HIGH TENSILE STRENGTH STAINLESS STEEL FLEXIBLE CONNECTION, 12" LENGTH, AGA/CSA APPROVED, PRE-COATED.
2. PAINT ALL EXTERIOR GAS PIPING, YELLOW COLOR.
3. PROVIDE PRESSURE REGULATOR WHERE REQUIRED.

5 GAS EQUIPMENT PIPE CONNECTION
NOT TO SCALE

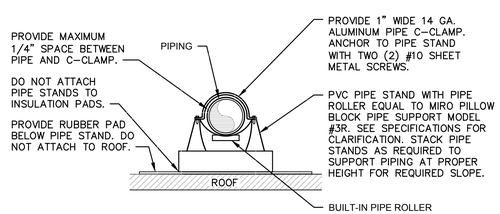

MAXIMUM SPACING FOR PIPE SUPPORTS	
HORIZONTAL PIPING:	SUPPORT SPACING (FEET)
1/2"	5
3/4" TO 1-1/4"	6
1-1/2" AND LARGER	12
VERTICAL PIPING: ALL SIZES	AT BASE, TOP AND MINIMUM 10'-0" INTERVALS

4 ROOF MOUNTED GAS PIPING SUPPORT DETAIL
NOT TO SCALE

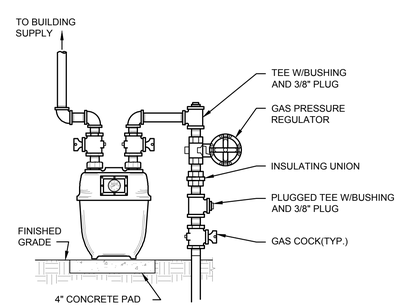

3 GAS METER DETAIL
NOT TO SCALE

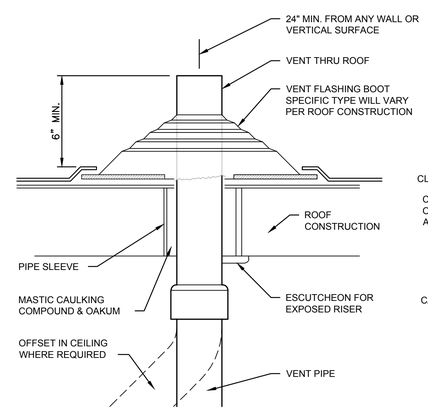

2 VENT THROUGH ROOF DETAIL (VTR)
NOT TO SCALE

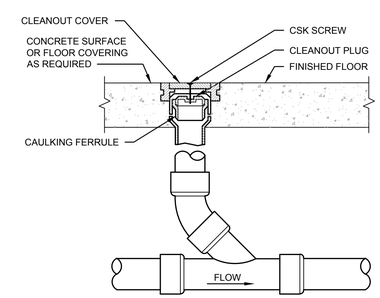

1 FLOOR CLEANOUT
NOT TO SCALE

ARCHITECT
B+A ARCHITECTURE, LLC
600 BROADWAY BLVD, SUITE 290
KANSAS CITY, MO 64105
PH: 816-753-6100

MEP ENGINEER
ENGINEERING BUILDING SOLUTIONS
ADDRESS 1
CITY, STATE ZIP
PH: 913-735-5654

PARKVILLE BOBA TEA SHOP
CREEKSIDE COMMONS, PARKVILLE, MO

SEAL

NOT FOR CONSTRUCTION

ISSUED: MARCH 23, 2023

NO.	REVISION	DATE

DESIGNED BY TT
DRAWN BY LH
CHECKED BY HBD

THIS DRAWING IS THE PROPERTY OF B+A ARCHITECTURE AND IS NOT TO BE REPRODUCED OR COPIED IN WHOLE OR IN PART. IT IS ONLY TO BE USED FOR THE PROJECT AND SITE SPECIFICALLY IDENTIFIED HEREIN AND IS NOT TO BE USED ON ANY OTHER PROJECT.

SCALES AS STATED HEREIN ARE VALID ON THE ORIGINAL DRAWING ONLY. CONTRACTOR SHALL CAREFULLY REVIEW ALL DIMENSIONS AND CONDITIONS SHOWN HEREIN AND AT ONCE REPORT TO THE ARCHITECT ANY ERROR INCONSISTENCY OR OMISSION DISCOVERED.

P101

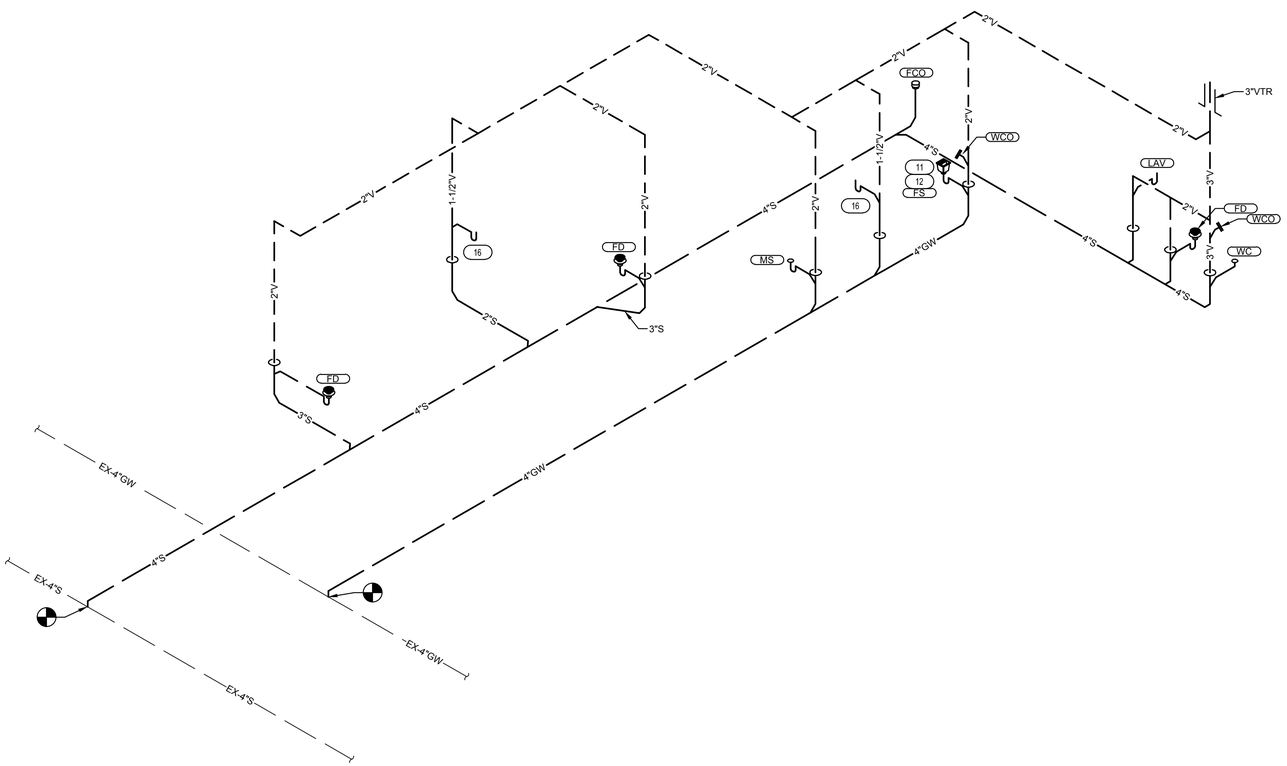

2 WASTE & VENT RISER

NOT TO SCALE

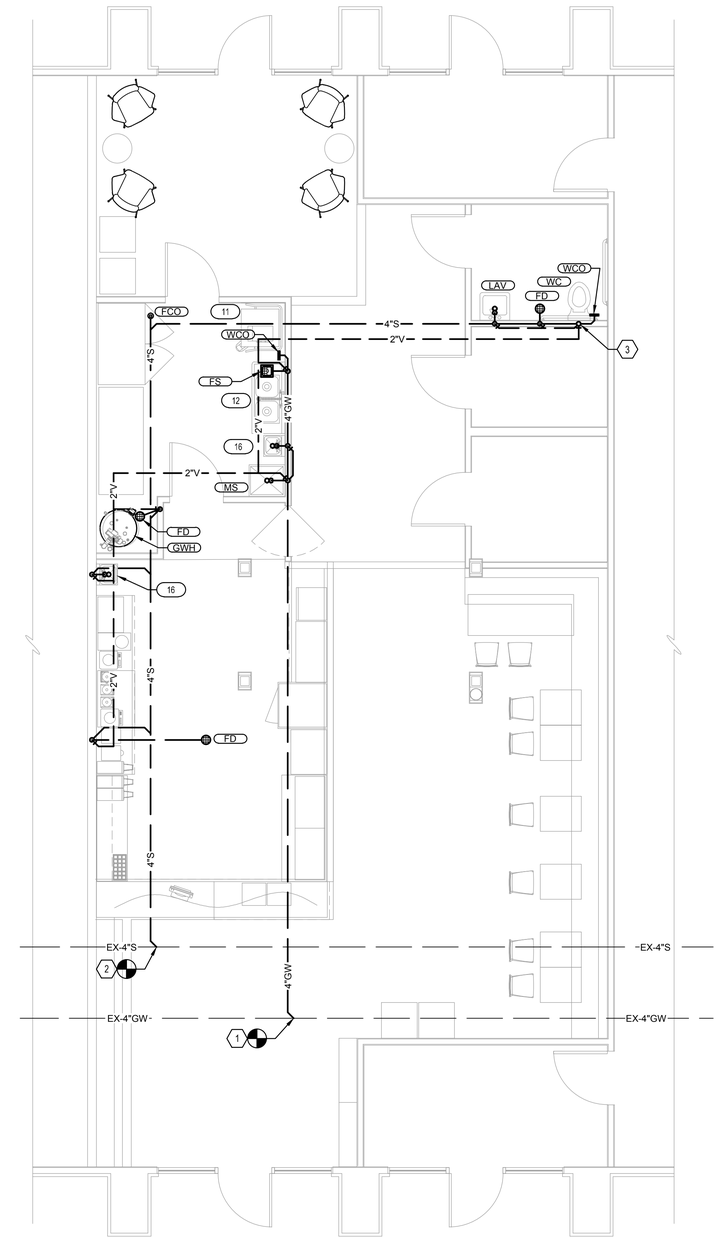

1 WASTE & VENT FLOOR PLAN

SCALE: 1/4" = 1'-0"

GENERAL NOTES

(NOT ALL NOTES APPLY)

1. REFERENCE SHEET P101 FOR GENERAL NOTES, SYMBOLS, AND ABBREVIATIONS.

KEYED NOTES:

1. CONNECT NEW 4"GW LINE INTO EXISTING 4"GW LINE IN THIS AREA. FIELD VERIFY EXACT CONNECTION POINT, LINE SIZE, MATERIAL, AND AVAILABLE INVERT.
2. CONNECT NEW 4"S LINE INTO EXISTING 4"S LINE IN THIS AREA. FIELD VERIFY EXACT CONNECTION POINT, LINE SIZE, MATERIAL, AND AVAILABLE INVERT.
3. ROUTE 3"V UP TO 3"VTR. COORDINATE FINAL PLACEMENT WITH ALL EXISTING AND NEW ROOF TOP EQUIPMENT. MAINTAIN A MINIMUM 10' FROM ALL FRESH AIR INTAKES, AND 2' FROM ALL VERTICAL SURFACES.

ARCHITECT
B+A ARCHITECTURE, LLC
600 BROADWAY BLVD, SUITE 290
KANSAS CITY, MO 64105
PH: 816-753-6100

MEP ENGINEER
ENGINEERING BUILDING SOLUTIONS
ADDRESS 1
CITY, STATE ZIP
PH: 913-735-5654

PARKVILLE BOBA TEA SHOP

CREEKSIDE COMMONS, PARKVILLE, MO

SEAL

NOT FOR CONSTRUCTION

ISSUED: MARCH 23, 2023

NO.	REVISION	DATE

DESIGNED BY TT
DRAWN BY LH
CHECKED BY HBD

THIS DRAWING IS THE PROPERTY OF B+A ARCHITECTURE AND IS NOT TO BE REPRODUCED OR COPIED IN WHOLE OR IN PART. IT IS ONLY TO BE USED FOR THE PROJECT AND SITE SPECIFICALLY IDENTIFIED HEREIN AND IS NOT TO BE USED ON ANY OTHER PROJECT.

SCALES AS STATED HEREIN ARE VALID ON THE ORIGINAL DRAWING ONLY. CONTRACTOR SHALL CAREFULLY REVIEW ALL DIMENSIONS AND CONDITIONS SHOWN HEREIN AND AT ONCE REPORT TO THE ARCHITECT ANY ERROR INCONSISTENCY OR OMISSION DISCOVERED.

P201

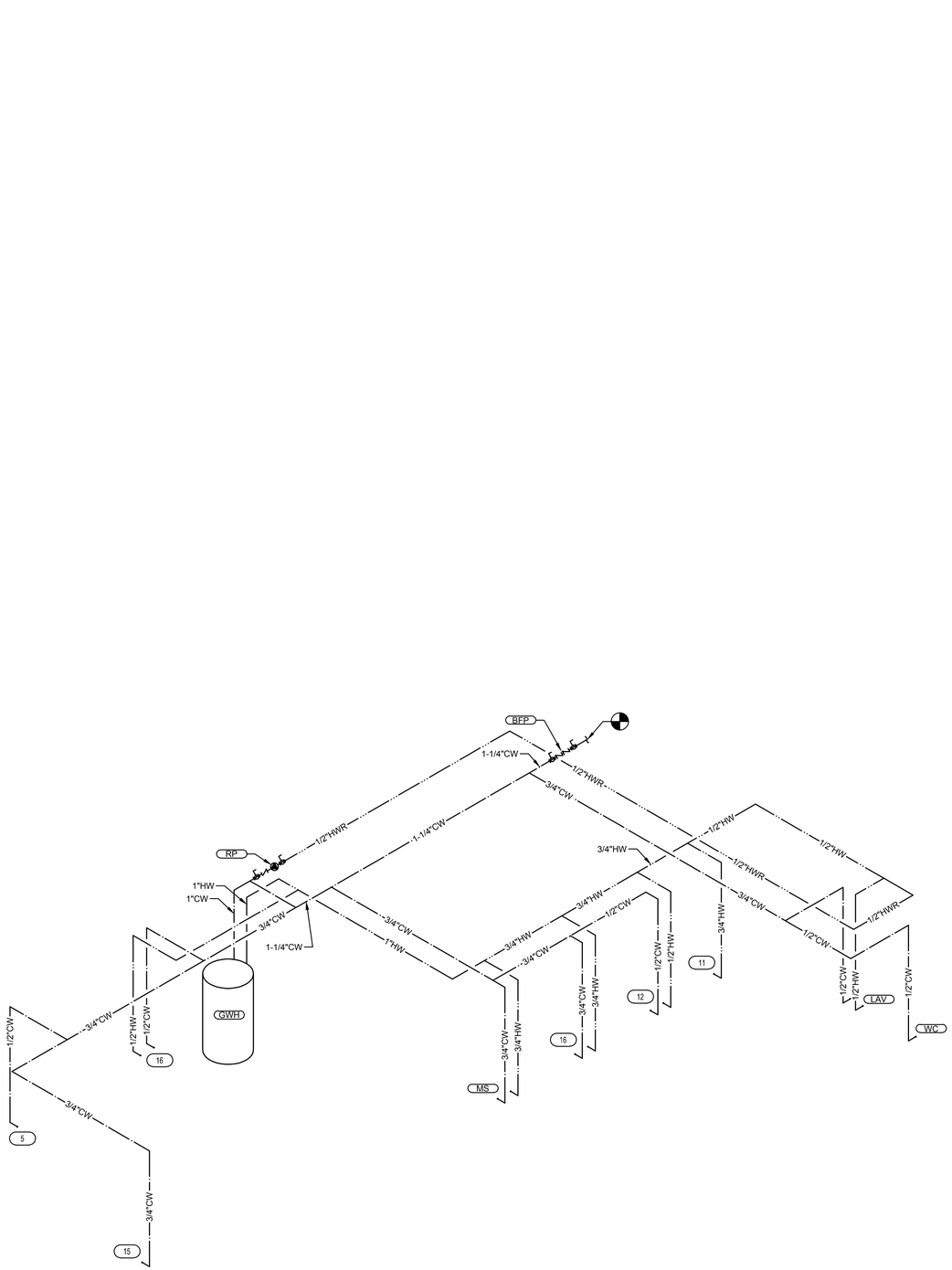

2 **WATER RISER**

NOT TO SCALE

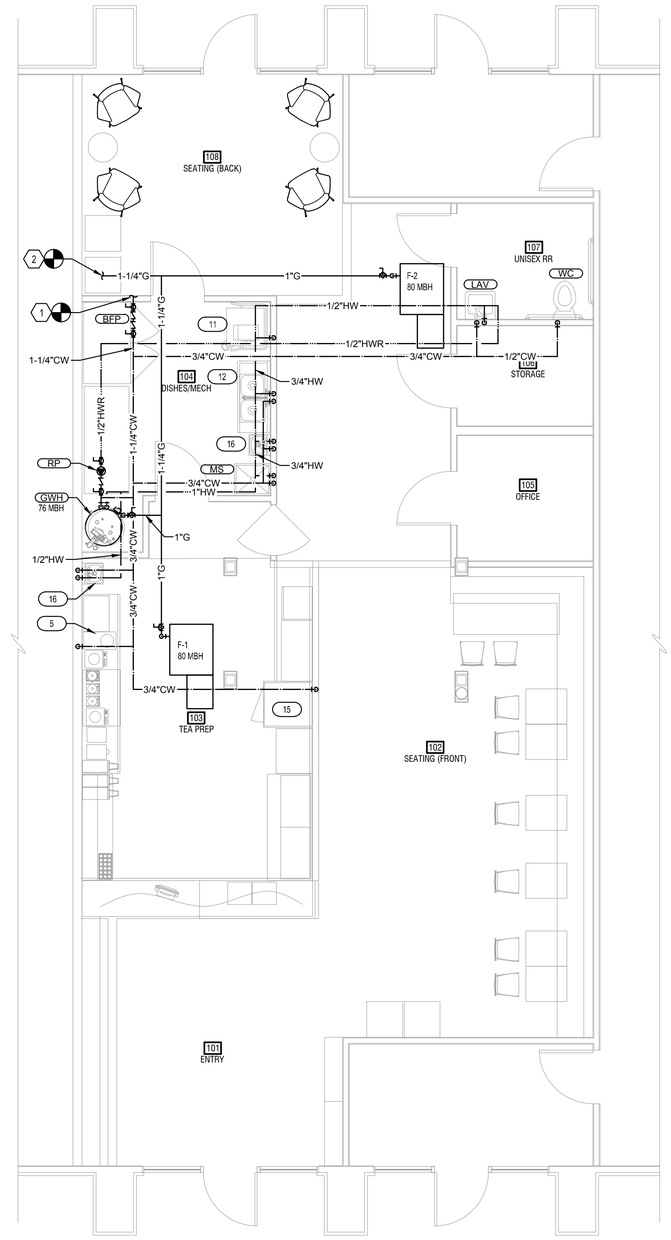

1 **WATER FLOOR PLAN**

SCALE: 1/4" = 1'-0"

GENERAL NOTES
(NOT ALL NOTES APPLY)

1. REFERENCE SHEET P101 FOR GENERAL NOTES, SYMBOLS, AND ABBREVIATIONS.

KEYED NOTES:

1. CONNECT NEW 1-1/4"CW INTO EXISTING LINE. FIELD VERIFY EXACT CONNECTION POINT, LINE SIZE, AND MATERIAL.
2. COORDINATE WITH GAS UTILITY FOR INSTALLATION OF TENANT GAS METER. SYSTEM SIZED FOR 236 MBH WITH A TOTAL DEVELOPED LENGTH OF 200' AT 7" WATER COLUMN.

ARCHITECT
B+A ARCHITECTURE, LLC
600 BROADWAY BLVD, SUITE 290
KANSAS CITY, MO 64105
PH: 816-753-6100

MEP ENGINEER
ENGINEERING BUILDING SOLUTIONS
ADDRESS 1
CITY, STATE ZIP
PH: 913-735-5654

PARKVILLE BOBA TEA SHOP
CREEKSIDE COMMONS, PARKVILLE, MO

SEAL

NOT FOR CONSTRUCTION

ISSUED: MARCH 23, 2023

NO.	REVISION	DATE

DESIGNED BY TT
DRAWN BY LH
CHECKED BY HBD

THIS DRAWING IS THE PROPERTY OF B+A ARCHITECTURE AND IS NOT TO BE REPRODUCED OR COPIED IN WHOLE OR IN PART. IT IS ONLY TO BE USED FOR THE PROJECT AND SITE SPECIFICALLY IDENTIFIED HEREIN AND IS NOT TO BE USED ON ANY OTHER PROJECT.

SCALES AS STATED HEREIN ARE VALID ON THE ORIGINAL DRAWING ONLY. CONTRACTOR SHALL CAREFULLY REVIEW ALL DIMENSIONS AND CONDITIONS SHOWN HEREIN AND AT ONCE REPORT TO THE ARCHITECT ANY ERROR INCONSISTENCY OR OMISSION DISCOVERED.

P202

15400 - PLUMBING WORK

DESCRIPTION
ALL PLUMBING AND ASSOCIATED WORK IN DIVISION 15 IS GOVERNED BY THIS SECTION. PROVIDE LABOR AND MATERIALS NECESSARY TO PROVIDE THE WORK AS SHOWN ON THE DRAWINGS AND SPECIFIED HEREIN. REFER TO OTHER DIVISIONS FOR CONTINUATION OF EXTERIOR AND ALLIED WORK.

QUALITY ASSURANCE
OBTAIN AND PAY FOR ALL PERMITS, INSPECTIONS AND CONNECTION FEES REQUIRED BY GOVERNING BODIES IN CONNECTION WITH THE WORK. DELIVER CERTIFICATES OF INSPECTION TO THE OWNER'S REPRESENTATIVE. ALL WORK SHALL COMPLY WITH GOVERNING CODES, ORDINANCES, AND REGULATIONS OF CITY, COUNTY AND STATE.

SUBMITTALS
SHOP DRAWINGS: SUBMIT MATERIALS, PRODUCTS, EQUIPMENT AND SYSTEMS AS SPECIFIED UNDER EACH PLUMBING SECTION IN THIS DIVISION IN ACCORDANCE WITH THE GENERAL CONDITIONS. SHOW PIPE SIZES, LOCATION, SLOPES OF HORIZONTAL RUNS, FITTINGS, VALVES, METERS, GAGES AND CONNECTIONS.

PRODUCT DATA: SUBMIT ON MATERIALS, FIXTURES, AND EQUIPMENT UNLESS OTHERWISE SPECIFIED OR ACKNOWLEDGED IN WRITING.

SAMPLES: SUBMIT WHEN SPECIFIED OR REQUESTED.

RECORD DOCUMENTS
REFER TO GENERAL CONDITIONS FOR REQUIREMENTS CONCERNING RECORD DOCUMENTS. ADDITIONAL REQUIREMENTS MAY BE SPECIFIED IN DIVISION 1. UNLESS SEPIAS OF THE DRAWINGS ARE TO BE FURNISHED BY THE ARCHITECT-ENGINEER FOR PREPARATION OF RECORD DRAWINGS, FURNISH OWNER'S REPRESENTATIVE WITH TWO SETS OF ACCURATELY MARKED COPIES OF THE DRAWINGS, INSTEAD OF ONE SET AS REQUIRED BY THE GENERAL CONDITIONS, INDICATING ALL CHANGES FROM ORIGINAL DRAWINGS AS INSTALLED.

PRODUCT HANDLING
PIPE, FIXTURES AND ACCESSORIES SHALL BE PROTECTED FROM DAMAGE IN SHIPMENT, HANDLING, STORAGE AND INSTALLATION: FROM MOISTURE, DIRT AND DEBRIS. PIPE, CLEANOUT AND FLOOR DRAIN OPENINGS SHALL BE TEMPORARILY PLUGGED WITH TEST PLUGS UNTIL FINAL CONNECTIONS ARE MADE.

GUARANTEE AND SERVICE
REFER TO GENERAL CONDITIONS FOR GUARANTEE. WHERE EXTENDED GUARANTEES ARE CALLED FOR, FURNISH THREE COPIES TO BE INSERTED INTO OPERATION AND MAINTENANCE MANUALS.

GENERAL
PLUMBING SYSTEMS SHALL BE PROVIDED COMPLETE. SHOULD A SYSTEM, OR ANY PART THEREOF FAIL TO MEET PERFORMANCE REQUIREMENTS, NECESSARY REPLACEMENTS, ALTERATIONS OR REPAIRS, AS REQUIRED BY THE OWNER'S REPRESENTATIVE, SHALL BE MADE TO BRING PERFORMANCE UP TO SPECIFIED REQUIREMENTS AND ALL BUILDING CONSTRUCTION AND FINISHES DAMAGED OR MARRED BY SUCH REPLACEMENTS, ALTERATIONS OR REPAIRS SHALL BE RESTORED TO PRIOR CONDITION, AT NO ADDITIONAL COST TO THE OWNER.

WHERE MULTIPLE ITEMS OF EQUIPMENT OR MATERIALS ARE REQUIRED THEY SHALL BE THE PRODUCT OF A SINGLE MANUFACTURER.

INSERTS, PIPE SLEEVES, HANGERS, SUPPORTS, FIXTURES, TRIM DRAINS AND ANCHORAGE OF PLUMBING SHALL BE PROVIDED AS SPECIFIED HEREIN. WHERE SUCH ITEMS ARE TO BE SET OR EMBEDDED IN CONCRETE, MASONRY OR SIMILAR WORK, THE ITEMS SHALL BE FURNISHED AND LAYOUT MADE AT THE PROPER TIME FOR THE SETTING OR EMBEDMENT THEREOF SO AS TO CAUSE NO DELAY IN THE WORK.

MANUFACTURER'S NAMES AND CATALOG NUMBERS
SPECIFIED REFERENCES HAVE BEEN MADE TO ONE OR MORE MANUFACTURER'S NAMES AND MODEL OR CATALOG NUMBERS. THIS DOES NOT NECESSARILY INDICATE THAT THE MATERIAL AND EQUIPMENT SPECIFIED IS AN "OFF THE SHELF" ITEM. REQUIREMENTS FOR SPECIFIC FINISHES, MATERIAL OR OTHER MODIFICATIONS MAY INTRODUCE VARIANCES FROM MANUFACTURERS' STANDARDS. MODIFICATIONS SHALL BE FULLY CONSIDERED.

CHARTS AND TAGS
IN AREAS HAVING VALVES, PROVIDE SINGLE LINE DIAGRAMS FRAMED UNDER GLASS AND MOUNTED ON EQUIPMENT ROOM WALL. THE DIAGRAMS SHALL GIVE NAME, NUMBER DESIGNATION AND LOCATION OF VALVE.

VALVES SHALL BE IDENTIFIED WITH 1/16 INCH THICK WHITE LAMINATED PLASTIC NAMEPLATES WITH 3/16 INCH HIGH BLACK LAMINATED LETTERS. THE NAMEPLATE IDENTIFICATION SHALL COINCIDE WITH ITEMS APPEARING ON DIAGRAMS. ATTACH NAMEPLATES TO VALVES WITH NON-CORROSIVE CHAIN OR WIRE.

ACCESS DOORS
PROVIDE ACCESS DOORS AS INDICATED AND SPECIFIED IN DRAWINGS

INSTALLATION AND WORKMANSHIP
THE WORK SHALL BE INSTALLED IN ACCORDANCE WITH THE MANUFACTURER'S RECOMMENDATIONS. ANY MATERIAL, APPARATUS OR EQUIPMENT WHICH, IN THE OPINION OF THE OWNER'S REPRESENTATIVE, IS IMPROPERLY INSTALLED SHALL BE REMOVED AND REINSTALLED IN AN APPROVED MANNER AT NO ADDITIONAL COST TO THE OWNER.

THE LOCATION OF PLUMBING PIPING SHALL BE COORDINATED TO ENSURE THAT IT CLEARS OPENINGS AND STRUCTURAL MEMBERS; THAT PIPING INDICATED AS CONCEALED CAN BE PROPERLY CONCEALED IN WALLS OR PARTITIONS AND THAT IT DOES NOT INTERFERE WITH LIGHTS, DUCTWORK OR EQUIPMENT HAVING FIXED LOCATIONS. MAKE NECESSARY HORIZONTAL OR VERTICAL OFFSETS WITH PIPE FITTINGS TO INSTALL THE SYSTEM IN THE AVAILABLE SPACE. CONCEAL OR INSTALL TIGHT TO STRUCTURE (IF EXPOSED) UNLESS OTHERWISE NOTED.

PIPING SHALL BE EXPOSED IN FINISHED AREAS ONLY WHERE INDICATED OR WITH THE APPROVAL OF THE OWNER'S REPRESENTATIVE.

WHERE DRAIN OR WATER CONNECTIONS NECESSARY TO THE OPERATION OF FIXTURES OR EQUIPMENT ARE NOT SPECIFICALLY SHOWN ON DIAGRAMS, EXTEND NECESSARY BRANCHES TO THE CLOSEST INDICATED BRANCH OR MAIN, AT NO ADDITIONAL COST TO THE OWNER.

EACH FIXTURE, EQUIPMENT DRAIN OR FLOOR DRAIN SHALL BE SEPARATELY TRAPPED UNLESS OTHERWISE INDICATED OR SPECIFIED.

PLUMBING PIPING AND EQUIPMENT SHALL NOT BE FIELD PAINTED, OR PRIMED BEYOND THE DEGREE OF APPLICATION FROM THE FACTORY SOURCE, OR EXCEPT AS REQUIRED BY APPLICABLE CODES AND AUTHORITIES HAVING JURISDICATION.

WATERPROOFING
DO NOT CUT OR PENETRATE WATERPROOFED SURFACES OR WATERPROOFING MEMBRANES WITHOUT FIRST MAKING ARRANGEMENTS FOR REPAIR BY A METHOD APPROVED BY THE OWNER'S REPRESENTATIVE.

ACCESS DOORS
INSTALL AS REQUIRED FOR MAINTENANCE, ADJUSTMENT, REMOVAL AND REPAIR OF VALVES, EQUIPMENT AND LIKE ITEMS. DOORS SHALL BE CONVENIENTLY LOCATED AND OF SUFFICIENT SIZE.

PIPING PROVISIONS FOR FIXTURES AND EQUIPMENT SPECIFIED IN OTHER SECTIONS OR FURNISHED BY THE OWNER
ROUGH IN LOCATIONS SHALL BE DETERMINED FOR SERVICES. PROVIDE ALL NECESSARY PLUMBING SERVICES, ACCESSIBLE VALVES ON PLUMBING BRANCHES AND MAKE ALL FINAL CONNECTIONS.

PLUMBING OPERATION AND MAINTENANCE MANUALS

DESCRIPTION
FURNISH TWO COPIES OF COMPLETE OPERATION AND MAINTENANCE MANUALS TO THE OWNER'S REPRESENTATIVE, FOR APPROVAL AND FOR THE OWNER, ON PLUMBING EQUIPMENT AND SPECIALTIES. THE MANUAL SHALL BE BOUND IN HARD-BACK, THREE-RING LOOSE-LEAF BINDERS.

MANUAL CONTENTS
TITLE SHEET WITH JOB NAME, AND THE NAMES, ADDRESSES AND PHONE NUMBERS OF THE CONTRACTOR, SUBCONTRACTOR, CONTROL SUBCONTRACTOR, RELATED CONTRACTOR AND MATERIAL AND EQUIPMENT SUPPLIERS.

INDEX OF CONTENTS
TYPEWRITTEN OPERATING INSTRUCTIONS FOR THE OWNER'S PERSONNEL DESCRIBING HOW TO OPERATE EACH PIECE OF EQUIPMENT, AND CAUTION AND WARNING NOTICES.

APPROVED SHOP DRAWINGS, PRODUCT DATA AND PARTS AND MAINTENANCE BOOKLET FOR EACH ITEM OF PLUMBING, EQUIPMENT SPECIFIED IN DIVISION 15.

COPIES OF CERTIFICATES OF INSPECTION, WHERE INSPECTION IS REQUIRED. GUARANTEES, INCLUDING EXTENDED GUARANTEES.

DELIVERY
DELIVER THE MANUALS TO THE OWNER'S REPRESENTATIVE PRIOR TO SUBMITTING APPLICATION FOR FINAL PAYMENT.

PLUMBING PIPING

DESCRIPTION
FURNISH AND INSTALL PLUMBING PIPING WHERE SHOWN ON DRAWINGS AND AS SPECIFIED.

PIPING MATERIALS
OPTIONS
1. CAST IRON HUBLESS SANITARY PIPE AND FITTINGS: CISPI STD. 301.
2. CAST IRON SOIL PIPE AND FITTINGS, SERVICE WEIGHT: ASTM A 74.
3. CAST IRON SOIL PIPE AND FITTINGS, EXTRA HEAVY WEIGHT: ASTM A 74.
4. STEEL PIPE: ASTM A 53.
5. MALLEABLE IRON FITTINGS, 150 LB.: ASTM A 197.
6. PIPE THREADS: ANSI B2.1.
7. NIPPLES, PIPE (THREADED): FED SPEC. WW-N-351.
8. COPPER WATER TUBE: ASTM B 88.
9. WROUGHT COPPER AND BRONZE SOLDER-JOINT PRESSURE FITTINGS: ANSI B16.29.
10. WROUGHT COPPER AND WROUGHT COPPER ALLOY SOLDER-JOINT DRAINAGE FITTINGS: ANSI BL6.29.
11. CAULKING LEAD: FED. SPEC. QQ-C-40 (2).
12. SHEET LEAD: FED. SPEC. QQ-L-201.
13. SHEET COPPER: ASTM B 152.
14. NO-HUB STAINLESS STEEL COUPLING AND GASKETS: CISPI STD. S-301.
15. WHERE ACCEPTABLE BY LOCAL AUTHORITY HAVING JURISDICTION SOLID WALL ABS PIPING MAY BE USED FOR WASTE PIPING.
   15.A. PVC/ABS PIPING CANNOT BE USED IN RETURN AIR PLENUM APPLICATION.

JOINTS AND CONNECTIONS
OPTIONS
1. CAST IRON, HUB AND SPIGOT: PACKED WITH OAKUM AND FINISHED WITH LEAD NOT LESS THAN 1 INCH DEEP; WELL CAULKED.
2. CAST IRON, NO-HUB: NEOPRENE GASKET AND CORRUGATED 304 STAINLESS STEEL SHIELD IN CONJUNCTION WITH 4 STAINLESS STEEL CLAMPS FOR 4" AND SMALLER, 6 CLAMPS FOR 5" AND LARGER.
3. BETWEEN LEAD AND BRASS: FERRULES OR SOLDERING NIPPLES WITH WIPED JOINTS 3/8" THICK AND 3/4" EACH SIDE OF JOINTS.
4. SCREWED JOINTS: AMERICAN NATIONAL STANDARD WITH PIPE FREE FROM CUTTING AND BURRS. THREE THREADS EXPOSED MAXIMUM.
5. SOLDERED JOINTS: 95-5 TIN-ANTIMONY SOLDER. SLIP JOINTS: USE FOR PLUMBING TRAP SEALS ON INLET SIDE ONLY.
6. BETWEEN COPPER AND FERROUS MATERIALS: INSULATING DIELECTRIC UNION.
7. FLANGED JOINTS: FURNISH WITH COMPANION FLANGE AND CLOTH INSERTED RUBBER GASKET.
8. FLANGED BOLTS: ASTM A 354, MINIMUM GRADE BD, ALLOY STEEL WITH HEX NUTS IN COMPLIANCE WITH ANSI B18.22 AND STANDARD ROLLED STEEL WASHERS.
9. ASSEMBLY FOR HUBLESS PIPING: AS RECOMMENDED BY THE MANUFACTURER.
10. CHANGES IN PIPE SIZE SHALL BE MADE WITH REDUCERS, INCREASERS OR REDUCING FITTINGS. BUSHINGS WILL NOT BE PERMITTED.

INSTALLATION
BEFORE INSTALLING PIPE IN ANY PART OF THE SYSTEM, THE PIPE SHALL BE CLEANED INSIDE AND MADE FREE OF OIL, DIRT, AND FOREIGN MATTER. PROPERLY ALIGN AND INSTALL IN NEAT ARRANGEMENT, TRUE TO THE LINES OF THE BUILDING. PITCH LINE AT A CONSTANT SLOPE FOR PROPER DRAINAGE.

EXCEPT AS NOTED OTHERWISE ON DRAWINGS, PIPING SHALL BE HELD AS HIGH AS POSSIBLE, BETWEEN STRUCTURES AND THROUGH JOIST WEBBING, WITH DUE REGARD TO CONFLICTS WITH OTHER SYSTEMS AND THEIR REQUIREMENTS FOR SPACE.

PIPING, INCLUDING NO-HUB PIPING, SHALL BE INSTALLED STRAIGHT AND TRUE TO VERTICAL AND HORIZONTAL LINES. DEFLECTION SHALL NOT EXCEED ONE DEGREE. WHEN NECESSARY TO ACHIEVE THIS ALIGNMENT PROVIDE ADDITIONAL HANGERS OR BRACING.

APPLY LUBRICANT TO SCREW JOINT MALE THREADS.

METAL TO BE SOLDERED SHALL BE CLEANED AND FLUXED AS SUITABLE FOR THE SOLDER USED.

NOTCHING OF COPPER TUBING OR PLASTIC PIPING FOR CONNECTIONS WILL NOT BE PERMITTED.

PLUMBING SPECIALITES

PIPE SLEEVES
SCHEDULE 40 BLACK STEEL, GALVANIZED 26 GAGE STEEL, PROVIDE FOR ALL PIPES THROUGH WALLS AND FLOORS.

ESCUTCHEONS
PROVIDE FOR ALL PIPING THROUGH WALLS, FLOORS AND CEILING WERE PIPING IS EXPOSED TO VIEW IN FINISHED AREA. ESCUTCHEONS SHALL BE CHROMIUM PLATED, TWO PIECE, HINGED WITH SET SCREW.

UNIONS
PROVIDE GROUND JOINT BRASS UNIONS OR FLANGES ON EACH PIPING CONNECTION TO EQUIPMENT.

PROVIDE DIELECTRIC UNIONS BETWEEN COPPER AND STEEL PIPING CONNECTION TO EQUIPMENT.

VACUUM BREAKERS
SHALL CONFORM TO THE REQUIREMENTS OF THE REFERENCED PLUMBING CODE AND SHALL BE PROVIDED FOR HOSE BIBBS, FLUSHOMETERS AND ANY FIXTURE OR EQUIPMENT WATER SUPPLY HAVING A THREADED OUTLET.

FLASHING
VENT FLASHING SHALL COMPLY WITH ROOFING MANUFACTURER'S WRITTEN SPECIFICATIONS

CLEANOUTS
CLEANOUTS ON NO-HUB PIPE SHALL BE STANDARD NO-HUB FITTINGS. CLEANOUTS ON CAST IRON HUB AND SPIGOT PIPING, SHALL BE CADMIUM PLATED. APPROVED MANUFACTURERS: ZURN, JOSAM OR JONESPEC.

TRAP PRIMERS
PROVIDE WHERE INDICATED ON DRAWINGS. PRECISION PRODUCTS WITH DISTRIBUTION UNIT OR APPROVED EQUAL.

PIPE SLEEVES
1. EXTEND SLEEVE 1/4 INCH BEYOND FINISHED SURFACE.
2. SET SLEEVE BEFORE POURING CONCRETE.
3. PROVIDE CLEARANCE BETWEEN SLEEVE AND PIPE OR BETWEEN SLEEVE AND INSULATION TO ALLOW FOR PIPE MOVEMENT DUE TO EXPANSION AND CONTRACTION.
4. INSULATION SHALL PASS CONTINUOUS THROUGH THE SLEEVE.
5. CAULK BETWEEN SLEEVE AND PIPE OR SLEEVE AND INSULATION. PREFABRICATED, PRE-INSULATED, "PIPE SHIELDS" WILL BE ACCEPTABLE FOR PIPES PASSING THROUGH FLOORS, EXTERIOR WALLS, FIRE WALLS AND FIRE RESISTIVE WALLS AND PARTIITONS.
6. ESCUTCHEONS: FIT AROUND INSULATION WHERE PRESENT. PROVIDE DEEP ESCUTCHEON PLATES WHERE PIPE SLEEVES EXTEND ABOVE FLOORS.
7. WATER HAMMER ARRESTERS: INSTALL WHERE SHOWN ON DRAWINGS.
8. CLEANOUTS: INSTALL WHERE SHOWN ON DRAWINGS AND AT BASE OF ALL RISERS. PROVIDE ADDITIONAL CLEANOUTS WHERE REQUIRED BY LOCAL CODES AND FOR CONVENIENCE OF TESTING AND ERECTION AT CONTRACTOR'S OPTION.
9. FRAMES AND COVERS SHALL BE FLUSH WITH ADJOINING ARCHITECTURAL FINISH.

PLUMBING VALVES

DESCRIPTION
INSTALL IN ACCESSIBLE LOCATION.
VALVES SHALL NOT BE INSTALLED WITH THE STEMS BELOW THE HORIZONTAL POSITION.

VALVES, GATE, 125# UNION BONNET. RISING STEM
3 INCH AND SMALLER:
1. SCREWED: ITT GRINNELL #3080 OR APPROVED EQUAL.
2. SOLDER JOINT: ITT GRINNELL #3080 SJ OR APPROVED EQUAL.

VALVES, BALL (MAY BE USED IN LIEU OF GATE VALVES UP TO 2"): 2" AND SMALLER NIBCO #T580; TWO PIECE BRONZE BODY, WITH SCREWED ENDS, CHROME PLATED BRONZE BALL WITH CONVENTIONAL PORT, 400 PSI, BLOW OUT PROOF STEM.

VALVES, GLOBE 150# TEFLON DISC. UNION BONNET
3 INCH OR SMALLER:
1. SCREWED: ITT GRINELL #3240 OR APPROVED EQUAL.
2. SOLDER JOINT: ITT GRINELL #3240 SJ OR APPROVED EQUAL.

VALVES, CHECK 125# REMOVABLE REGRINDABLE DISC A. 3 INCH AND SMALLER, HORIZONTAL:
1. SCREWED: ITT GRINELL #3300 OR APPROVED EQUAL.
2. SOLDER JOINT: ITT GRINELL #3300 SJ OR APPROVED EQUAL.

3 INCH AND SMALLER, VERTICAL:
1. FOR SCREWED AND SOLDER JOINT INSTALLATION. SAME AS SECTION A OR APPROVED EQUAL. PROVIDE ADAPTERS FOR SOLDER JOINT CONNECTION. 2.05 HOSE BIBBS A. SEE FIXTURE SCHEDULE ON DRAWINGS. B. PLUG COCKS, 125# BRONZE COCKS. TWO (2) INCH AND SMALLER SHALL BE CRANE NO. 250 OR APPROVED EQUAL.

INSTALLATION
INSTALL VALVES WHERE SHOWN ON DRAWINGS.

PLUMBING HANGERS AND SUPPORTS

DESCRIPTION
PROVIDE HANGERS FOR ALL PIPING NOT INDICATED BELOW GRADE. USE HANGERS CAPABLE OF ADJUSTMENT.

HANGERS AND SUPPORTS
HANGERS FOR BLACK OR GALVANIZED STEEL PIPE SHALL BE GRINNELL, MODEL NO. 65 OR APPROVED EQUAL.

HANGERS FOR CAST IRON PIPE SHALL BE GRINNELL, MODEL NO. 260 OR APPROVED EQUAL.

HANGERS FOR COPPER TUBING SHALL BE GRINNELL, MODEL NO. 97 C OR APPROVED EQUAL.

TRAPEZE HANGERS OF A TYPE APPROVED BY THE OWNER'S REPRESENTATIVE MAY BE USED WHERE PIPES ARE DESIGNED TO RUN PARALLEL AT THE SAME ELEVATION.

PROVIDE ISOLATION HANGER WITH PROTECTIVE SHIELD, GRINNELL, MODEL NO. 300 103 OR APPROVED EQUAL, FOR ALL INSULATED PIPING. AT HANGER POINTS, PROVIDE 6 INCH LONG SECTION OF 1/2 INCH THICK CALCIUM SILICATE SECTIONAL PIPE INSULATION WITH FACTORY LONGITUDINAL LAP. SEAL BUTT JOINTS WITH INSULATING CEMENT.

STRAP HANGERS: NOT PERMITTED.

RISER CLAMPS: PROVIDE RISER CLAMPS FOR VERTICAL PIPING AT EACH LEVEL, GRINNELL MODEL NO. 261

INSERTS: IN CONCRETE, GRINNELL MODEL NO. 285 OR APPROVED EQUAL, HAVING ADJUSTMENT FROM 3/4 INCH THROUGH 1-1/4 INCH. IN METAL DECKS READHEAD SD1 OR APPROVED EQUAL. POWDER PROPELLED PERMITTED IN NEW CONSTRUCTION WHERE TYPE AND LOCATION ARE APPROVED PRIOR TO INSTALLATION. IN EXISTING CONSTRUCTION, START SLUGIN NO. 6800 SERIES OR APPROVED EQUAL.

SIDE BEAM CLAMPS: PROVIDE WHEN SUPPORTING FROM STRUCTURAL STEEL MEMBERS, GRINNELL, MODEL 225 OR APPROVED EQUAL.

OTHER SUPPORTS: OBTAIN OWNER'S REPRENTATIVE APPROVAL FOR OTHER METHODS OF SUPPORT.

SPACING OF HANGERS
PROVIDE HANGER AT EACH CHANGE OF DIRECTION.

SPACE HANGERS AND SUPPORTS TO PREVENT SAGGING AND REDUCE STRAIN ON VALVES AND SPECIALTIES WITH SPACING NO GREATER AND ROD NO SMALLER THAN SHOWN ON THE FOLLOWING TABLE. HANGERS SHALL ALLOW FOR EXPANSION AND CONTRACTION.

FERROUS PIPING AND COPPER TUBING:

DIAMETER OF PIPE	MAXIMUM SPACING	ROD SIZE
1/2" THROUGH 1-1/2"	6 FT.	3/8"
2" THROUGH 3"	10 FT.	1/2"
4" THROUGH 5"	12 FT.	5/8"
6" AND LARGER	16 FT.	3/4" D.

CAST IRON PIPING:

DIAMETER OF PIPE	MAXIMUM SPACING	ROD SIZE	
2" AND 3"	EACH JOINT	3/8"	
4" AND 5"	EACH JOINT	1/2"	
6" AND 8"	EACH JOINT	3/4"	
10" THROUGH 15"	EACH JOINT	3/4"	(TWO HANGERS)

RISER CLAMPS
INSTALL AT EACH LEVEL BELOW THE FLOOR. SUSPEND FROM TWO HANGER RODS AND INSERTS WHERE THE INSTALLATION OF ESCUTCHEON PLATES IS REQUIRED.

TESTING OF PLUMBING PIPING

DESCRIPTION
CONDUCT ALL TESTS AFTER PIPING IS INSTALLED AND BEFORE PIPING IS CONCEALED OR COVERED.

PROVIDE ALL NECESSARY TEMPORARY PIPING CLOSURES.

PROVIDE ALL TESTING EQUIPMENT, MATERIALS AND SUPPLIES.

SYSTEMS SHALL REMAIN UNDER TEST FOR SUFFICIENT LENGTH OF TIME TO PROVE TIGHTNESS THEREOF AND FOR ADEQUATE OBSERVATION BY THE ARCHITECT-ENGINEER.

MATERIALS OTHER THAN THOSE SPECIFIED FOR JOINING WILL NOT BE PERMITTED IN THE PIPING SYSTEMS FOR THE PURPOSE OF STOPPING LEAKS.

ALL LEAKS DISCLOSED BY THE TESTING PROCEDURES SHALL BE REPAIRED AND TESTING REPEATED UNTIL THE SYSTEM IS PROVEN TIGHT.

TESTING REQUIREMENTS ARE MINIMUM AND ARE NOT INTENDED TO BE LIMITING WHERE ADDITIONAL TESTING METHODS ARE REQUIRED BY THE AUTHORITY HAVING JURISDICTION.

SUBMITTALS
STERILIZATION: PROVIDE A DATED LETTER TO THE ARCHITECT-ENGINEER'S REPRESENTATIVE STATING THAT PIPING SYSTEM HAS BEEN STERILIZED AND FLUSHED AS SPECIFIED.

PIPING TEST
DOMESTIC HOT AND COLD WATER PIPING SHALL BE FILLED, THEN TESTED TO A HYDROSTATIC PRESSURE OF 150 PSIG. MAINTAIN TEST PRESSURE FOR A MINIMUM OF ONE HOUR.

SANITARY PIPING, PREVIOUS TO CONNECTION OF FIXTURES, SHALL BE FILLED WITH WATER TO THE TOP OF THE SYSTEM AND PROVEN TIGHT. WHEN TESTING THE SYSTEM BY SECTIONS THE MINIMUM HEIGHT OF THE WATER COLUMN SHALL BE 10 FEET. EXAMINE ALL JOINTS FOR LEAKS.

NEW FIRE STANDPIPE SYSTEM SHALL BE TESTED TO A HYDROSTATIC PRESSURE OF 200 PSIG. MAINTAIN TEST PRESSURE FOR A MINIMUM OF TWO HOURS.

GAS PIPING SHALL BE TESTED WITH NITROGEN TO 50 PSIG. PRESSURE SHALL BE MEASURED WITH A MANOMETER. MAINTAIN TEST PRESSURE FOR A MINIMUM OF 30 MINUTES.

STERILIZATION
AFTER TESTS ARE COMPLETED ALL WATER SUPPLY SYSTEMS SHALL BE FILLED WITH A SOLUTION CONTAINING 100 PPM OF AVAILABLE CHLORINE AND ALLOWED TO STAND FOR A PERIOD TO TWO HOURS BEFORE BEING FLUSHED WITH CLEAN WATER.

PLUMBING, FIXTURES, TRIM AND DRAINS

MANUFACTURER
MANUFACTURER SHALL BE AS SCHEDULED OR BY APPROVED EQUAL.

PIPING
PIPING TO SERVE FIXTURES AND EQUIPMENT AND EXPOSED TO VIEW IN FINISHED AREAS SHALL BE BRASS, CHROMIUM PLATED.

SUPPORTS
PROVIDE ALL BRACKETS, PLATES, ANCHORS AND FASTENING DEVICES REQUIRED FOR ANCHORING THE FIXTURES RIGIDLY IN PLACE. RISERS TO SHOWER HEADS SHALL BE ANCHORED TO THE WALL CONSTRUCTION TO PREVENT MOVEMENT.

FIXTURES
PROVIDE PLUMBING FIXTURES AS SCHEDULED ON DRAWINGS, AMERICAN STANDARD, KOHLER, ELJER OR APPROVED EQUAL.

PLUMBING DRAINS
FURNISH WITH SEEPAGE FLANGE WHERE INSTALLED WITH PANS OR FLASHING, FURNISH CLAMPING RING.

ALL DRAINS SHALL BE OF THE SAME MANUFACTURER.

FURNISH FLOOR DRAINS WITH PRIMER CONNECTIONS WHERE INDICATED ON THE DRAWINGS. IN LIEU OF CAST-IN PRIMER CONNECTIONS ON THE DRAIN BODY, A TEE BETWEEN THE DRAIN BODY AND THE TRAP, TO RECEIVE THE PRIMER DISCHARGE WILL BE ACCEPTABLE.

PROVIDE FLOOR DRAINS WITH 4 INCH DEEP SEAL TRAPS.

PROVIDE ALL DRAINS AS SCHEDULED ON DRAWINGS OR APPROVED EQUAL.

INSTALLATION
DRAIN SHALL BE INSTALLED WHERE SHOWN ON THE DRAWINGS; ACCESSIBLE AND LOCATED TO SUIT EQUIPMENT APPROVED FOR INSTALLATION. WHERE FLUSH VALVES ARE SPECIFIED WITH FIXTURES, THE SUPPLY TO THE VALVE IN EACH ROOM SHALL BE AT THE SAME HEIGHT FOR THE TYPE OF FIXTURE AND THE VALVE SHALL BE SET IN PLACE SO THAT THE CENTER LINE OF THE VALVE DISCHARGE IS DIRECTLY ABOVE THE CENTER LINE OF FIXTURE STUD. BENDING OF NIPPLE BETWEEN THE VALVE AND THE STUD TO ACHIEVE CONNECTION WILL NOT BE PERMITTED.

CHROME PLATED PIPING REQUIRING THE USE OF WRENCH SHALL BE PROTECTED FROM DAMAGE.

BOLT WATER CLOSET CARRIER TO FLOOR.

GAS PIPING

PIPING
SHALL COMPLY WITH THE REQUIREMENTS OF NFPA NO. 54 AND THE LOCAL GAS COMPANY.

PIPE SHALL BE SCHEDULE 40 BLACK STEEL PIPE WITH MALLEABLE FITTINGS

INSTALLATION
PIPING SHALL COMPLY WITH THE REQUIREMENTS OF NFPA NO. 54 AND THE LOCAL GAS COMPANY.

INSTALL GAS SHUT-OFF AND GAS MANIFOLDS AS INDICATED OR REQUIRED.

DOMESTIC HOT AND COLD WATER

DESCRIPTION
THE WORK INCLUDES FURNISHING AND INSTALLING HOT AND COLD WATER PIPING AS SHOWN ON THE DRAWINGS AND SPECIFIED HEREIN.

PIPING
HOT AND COLD WATER PIPING SHALL BE COPPER WATER TUBE HARD TEMPER, TYPE "L" WITH WROUGHT SOLDER FITTINGS ABOVE FLOOR AND SOFT TEMPER TYPE "K" WITH WROUGHT SOLDER FITTINGS BELOW GRADE.

GATE VALVES
SPECIFIED IN SECTION, PLUMBING VALVES .

INSTALLATION
NOTCHING OF PIPE FOR CONNECTION NOT PERMITTED.

WHERE POSSIBILITY OF BACKFLOW FROM THE DRAIN TO THE SUPPLY FITTING EXISTS, INSTALL VACUUM BREAKERS.

NOT MORE THAN ONE LAVATORY, SINK, OR SIMILAR FIXTURE SHALL BE SUPPLIED BY A 1/2 INCH BRANCH. LINEAR DIMENSIONS NOT TO EXCEED 5 FEET.

MAKE CONNECTION TO EQUIPMENT AND FIXTURES INDICATED ON THE DRAWINGS OR SPECIFIED HEREIN.

HOT WATER BRANCH CONNECTIONS TO DISTRIBUTION MAINS SHALL BE TOP TAKE-OFF, SWING JOINT TYPE.

ALL PIPING INSTALLED BELOW GROUND SHALL RECEIVE TWO COATS OF KOPPERS NO. 50 OR APPROVED EQUAL.

PLUMBING INSULATION

DESCRIPTION
INSULATION SHALL NOT BE INSTALLED UNTIL TESTING PROCEDURES HAVE BEEN COMPLIED WITH AND ALL SURFACES HAVE BEEN CLEANED AND FREE OF DIRT, GREASE AND COMPLETELY DRIED.

MATERIALS SHALL COMPLY WITH UL 723, FLAME SPREAD RATING, HOT SURFACE TEST PERFORMANCE, AND SMOKE DEVELOPED RATING.

SUBMITTALS
SAMPLES AND MANUFACTURER'S PRODUCT DATA: SUBMIT SAMPLES OF INSULATION AND ADHESIVE AND PRODUCT DATA LISTING RECOMMENDATIONS FOR USE AND COMPLIANCE WITH NFPA 90.

INSULATION
INSULATION FOR HOT AND COLD WATER PIPING, SHALL BE SECTIONAL GLASS FIBER AS MANUFACTURED BY OWENS CORNING FIBERGLASS TYPE ASJ/SSLII OR APPROVED EQUAL, WITH FACTORY APPLIED, ALL PURPOSE, FIRE RETARDANT JACKET.

INSULATION FOR EXPOSED HOT AND COLD WATER PIPING SHALL BE SECTIONAL GLASS FIBER AS MANUFACTURED BY OWENS CORNING FIBERGLASS TYPE ASJ/SSLII OR APPROVED EQUAL, WITH FACTORY APPLIED, .016 EMBOSSED ALUMINUM JACKET.

ADHESIVE SHALL BE BENJAMIN FOSTER 30-36, OR APPROVED EQUAL, WHITE INSULATION LAGGING ADHESIVE.

VAPOR BARRIER MASTIC SHALL BE BENJAMIN FOSTER NO. 82-07, WHITE, OR APPROVED EQUAL.

INSTALLATION
HOT AND COLD WATER PIPING: SHALL BE INSULATED WITH 1/2 INCH THICK GLASS FIBER INSULATION HAVING A FACTORY APPLIED, ALL PURPOSE, FIRE RETARDANT JACKET WITH A MINIMUM R-4.0 PER INCH. CONCEALED AND EXPOSED PIPING SHALL HAVE THE INSULATION APPLIED WITH SIDE AND END JOINTS BUTTED TIGHTLY. SEAL JACKET LEGS AND BUTT JOINT STRIPS WITH ADHESIVE.

INSULATE FITTINGS FOR PIPING UP TO 3 INCHES IPS WITH MOLDED GLASS FIBER. INSULATE FITTINGS FOR PIPING LARGER THAN 3 INCHES WITH MOLDED FITTINGS OR SEGMENTED SECTIONS, WIRED IN PLACE TO THE SAME THICKNESS AS ADJACENT INSULATION. EXPOSED INSULATED PIPING AND FITTINGS SHALL BE JACKETED WITH 6 OUNCE CANVAS PIPING INCLUDING THE FITTING CHANGE FROM HORIZONTAL TO VERTICAL. CONCEALED AND EXPOSED PIPING SHALL HAVE THE INSULATION APPLIED WITH SIDE AND END JOINTS BUTTED TIGHTLY. SEAL OFF ENDS OF INSULATION WITH VAPOR BARRIER MASTIC AT EACH FITTING AND AT 21 FOOT INTERVALS ON CONTINUOUS RUNS.

INSTALL THE FACTORY APPLIED FIRE RETARDANT JACKET VAPOR BARRIER SO THAT IT WILL LAP SMOOTHLY AND SECURELY AT THE LONGITUDINAL LAP AND ADHERE IT WITH VAPOR BARRIER MASTIC. ADHERE 3 INCH WIDE BUTT STRIPS X SMOOTHLY OVER ALL END JOINTS WITH THE VAPOR BARRIER MASTIC TO ASSURE A CONTINUOUS VAPOR BARRIER - NO STAPLES ALLOWED. INSULATE DRAIN BODIES AND FITTINGS WITH METERED SEGMENTS OF PIPE INSULATION, OVERSIZED PIPE INSULATION OR MOLDED FITTINGS. COAT WITH TWO, 1/8 INCH COATS OF VAPOR BARRIER MASTIC REINFORCED WITH GLASS FABRIC EXTENDING 2 INCHES ONTO ADJACENT PIPES. EXPOSED INSULATED PIPING AND FITTINGS SHALL BE JACKETED WITH 8 OUNCE CANVAS. TERMINATE INSULATION NEATLY AT CLEANOUTS ON STORM AND COLD DRAIN PIPING. DO NOT COVER CLEANOUTS.

DOMESTIC WATER HEATING

DESCRIPTION
PROVIDE DOMESTIC WATER HEATING EQUIPMENT WHERE SHOWN ON DRAWINGS AND SPECIFIED.

DISCHARGE PIPE
RELIEF VALVE DISCHARGE SHALL BE COPPER WATER TUBE, TYPE M.

INSTALLATION
WATER HEATER SHALL BE INSTALLED WHERE SHOWN ON THE DRAWINGS.

DISCHARGE PIPE SHALL HAVE TERMINATING END CUT AT 45 DEGREE ANGLE.

TERMINATE RELIEF VALVE DRAIN AS SHOWN ON THE DRAWINGS.

ARCHITECT
B+A ARCHITECTURE, LLC
600 BROADWAY BLVD, SUITE 290
KANSAS CITY, MO 64105
PH: 816-753-6100

MEP ENGINEER
ENGINEERING BUILDING SOLUTIONS
ADDRESS 1
CITY, STATE ZIP
PH: 913-735-5654

PARKVILLE BOBA TEA SHOP
CREEKSIDE COMMONS, PARKVILLE, MO

SEAL

NOT FOR CONSTRUCTION

ISSUED: MARCH 23, 2023

NO.	REVISION	DATE

DESIGNED BY TT
DRAWN BY LH
CHECKED BY HBD

THIS DRAWING IS THE PROPERTY OF B+A ARCHITECTURE AND IS NOT TO BE REPRODUCED OR COPIED IN WHOLE OR IN PART. IT IS ONLY TO BE USED FOR THE PROJECT AND SITE SPECIFICALLY IDENTIFIED HEREIN AND IS NOT TO BE USED ON ANY OTHER PROJECT.

SCALES AS STATED HEREIN ARE VALID ON THE ORIGINAL DRAWING ONLY. CONTRACTOR SHALL CAREFULLY REVIEW ALL DIMENSIONS AND CONDITIONS SHOWN HEREIN AND AT ONCE REPORT TO THE ARCHITECT ANY ERROR INCONSISTENCY OR OMISSION DISCOVERED.