PUBLIC STREET PLANS FOR
US HIGHWAY 50 (BROADWAY BOULEVARD) PUBLIC IMPROVEMENTS
CITY OF SEDALIA, MISSOURI
PETTIS COUNTY, MISSOURI

LEGEND

CTL	SURVEY CONTROL POINT		TRAFFIC SIGNAL BOX
	SURVEY BENCHMARK		TRAFFIC SIGNAL MANHOLE
TBM	SURVEY TEMPORARY BEMCHMARK		TRAFFIC SIGNAL POLE W/ ARM
GM	GAS METER		TRAFFIC SIGNAL POLE
GAR	GAS RISER		TRAFFIC SIGNAL CONTROL BOX
	GAS MANHOLE	TS	TRAFFIC SIGNAL PEDESTAL
GR	GAS REGULATOR		ELECTRIC MANHOLE
TVP	TELEVISION PEDESTAL	EM	ELECTRIC METER
F	FIBER BOX	ER	ELECTRIC RISER
	FIBER PEDESTAL	E	ELECTRIC BOX
C	CABLE BOX		ELECTRIC CABINET
CV	CABLE VAULT		ELECTRIC JUNCTION BOX
TP	TELEPHONE PEDESTAL	SPH	SPRINKLER HEAD
	STORM MANHOLE	SCV	SPRINKLER CONTROL VALVE
	STORM GRATE		WATER METER PIT
	SANITARY MANHOLE		FIRE HYDRANT
YL	YARD LIGHT	WM	WATER METER
LTP	LIGHT POLE	WV	WATER VALVE
	POWER POLE	FP	FLAG POLE
LPPP	POWER POLE W/ LIGHT		SIGN
	GUY WIRE		BOLLARD
	STUMP		WOOD POST
BU	BUSH		STEEL POST
	EVERGREEN TREE	COL	COLUMN
	DECIDUOUS TREE		BORE HOLE

- SECTION LINE
- PROPERTY LINE
- CENTER LINE
- PROPOSED ROW LINE
- EXISTING ROW LINE
- UTILITY EASEMENT
- 1371 EXISTING MAJOR CONTOUR
- 1371 EXISTING MINOR CONTOUR
- 1371 PROPOSED MAJOR CONTOUR
- 1371 PROPOSED MINOR CONTOUR
- TEL EXISTING TELEPHONE LINE
- SS EXISTING SANITARY LINE
- EXISTING STORM LINE
- GAS GAS EXISTING GAS LINE
- W EXISTING WATER LINE
- EXISTING CHAIN LINK FENCE
- OHE EXISTING OVERHEAD ELECTRIC
- P EXISTING PIPE LINE
- GRADING LIMITS
- TEMPORARY CONSTRUCTION EASEMENT
- PROPOSED CHAIN LINK FENCE
- PROPOSED WOOD PRIVACY FENCE
- EXISTING TREELINE
- CONSTRUCTION LIMITS
- UNDERDRAIN
- ASPHALT
- 3/4" UBAWS
- CONCRETE

ABBREVIATION TABLE

M.G.	MATCH GRADE
P	PAVEMENT
TC	TOP OF CURB
BC	BACK OF CURB
EP	EDGE OF PAVEMENT
R/W	RIGHT-OF-WAY
TCE	TEMPORARY CONSTRUCTION EASEMENT
PROP.	PROPOSED
EXIST.	EXISTING
TYP.	TYPICAL
(R)	REMOVAL
CONST.	CONSTRUCT
TBM	TEMPORARY BENCMARK
C.P.	CONTROL POINT
D.N.D.	DO NOT DISTURB
U.I.P.	USE IN PLACE
ADJ.	ADJUST
EL.	ELEVATION
ESMT.	EASEMENT
B-B	BACK OF CURB TO BACK OF CURB DIMENSION

MISSOURI ONE CALL SYSTEM

1-800-DIG-RITE or 811

www.mo1call.com

THE EXISTING UTILITY LOCATIONS SHOWN ON THE PLANS ARE APPROXIMATE AND MAY NOT INCLUDE ALL LINES PRESENT. THE CONTRACTOR SHALL BE RESPONSIBLE TO CALL "1-800-DIG-RITE", AND COORDINATE FIELD LOCATION OF EXISTING UNDERGROUND UTILITIES PRIOR TO BEGINNING GRADING ACTIVITIES. !!STOP!! CALL BEFORE YOU DIG!!

PROJECT LOCATION

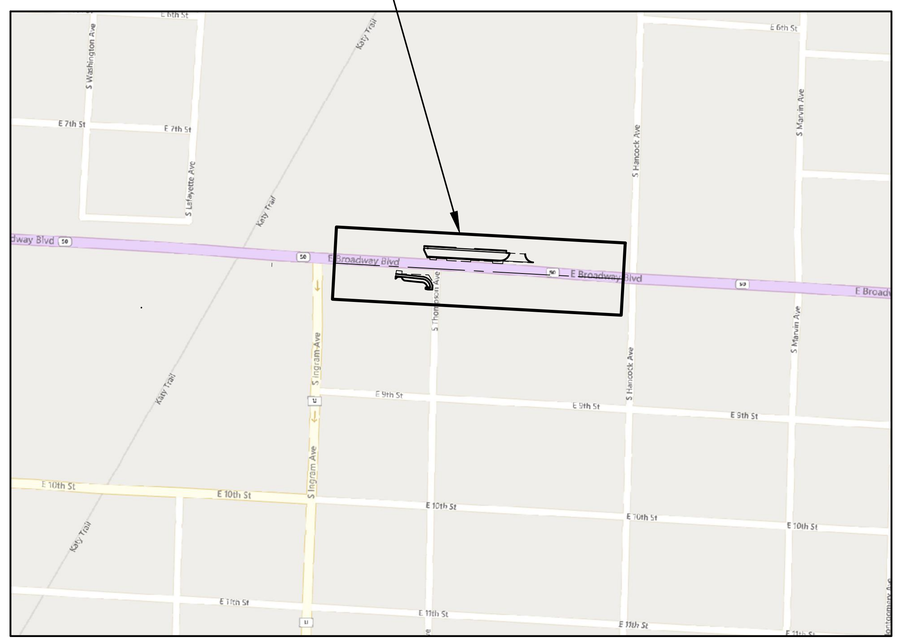

N

N.T.S.

LOCATION MAP

NOT TO SCALE

INDEX OF SHEETS

UTILITY COMPANIES

TELEPHONE SERVICE
SOCKET TELECOM
EVAN CAMPBELL
2703 CLARK LN.
COLUMBIA, MO 65202
(573) 447-7575

GAS SERVICE
LIBERTY
AMY WOOLRIDGE
(573) 979-5015

STORM WATER FACILITIES
CITY OF SEDALIA
PRETREATMENT COORDINATOR
BRITTANY WILLBANKS
200 SOUTH OSAGE AVE.
SEDALIA, MO 65301
(660) 620-5160

WATER SERVICE
WATER DEPARTMENT
DAVID MURRAY
200 SOUTH OSAGE AVE.
SEDALIA, MO 65301
(660) 460-0118

SANITARY SEWER SERVICE
CITY OF SEDALIA
DAVID GURKIN
200 SOUTH OSAGE AVE.
SEDALIA, MO 65301
(660) 221-8824

ELECTRIC SERVICE
EVERGY
1710 PASEO BLVD.
KANSAS CITY, MO 64108
(888) 544-4852

PREPARED & SUBMITTED BY:
OLSSON, INC
7301 W. 133RD STREET, SUITE 200
OVERLAND PARK, KANSAS 66213

olsson

7301 West 133rd Street
Suite 200
Overland Park, KS 66213
olsson.com
TEL 913.381.1170
FAX 913.381.1174
Olsson - Engineering
Missouri COA #001592

STATE OF MISSOURI
REO A. BRENNEY BATT
NUMBER PE-2010019516
PROFESSIONAL ENGINEER
07/25/2025

REV. NO.	DATE	DESCRIPTION	BY

REVISIONS

TITLE SHEET

US HWY 50 (BROADWAY BLVD.)
PUBLIC IMPROVEMENTS

SEDALIA, MISSOURI

2025

drawn by: DAC
designed by: DAC
project no.: 025-01245
date: 07.25.2025

F:\2025\01001-01500\025-01245\40-Design\AutoCAD\Final Plans\Sheets\GENERAL\T_TTL01_01245.dwg
DATE: Jul 25, 2025 9:13pm USER: dcove

BROADWAY BLVD									
NO.		STATION	NORTHING	EASTING	LENGTH	LINE/CHORD BEARING	DELTA	TANGENT	RADIUS
L1		10+00.00 18+00.00	1045991.5996 1045947.3969	1434255.2314 1435054.0093	800.00'	S86°49'57"E			

THOMPSON AVE									
NO.		STATION	NORTHING	EASTING	LENGTH	LINE/CHORD BEARING	DELTA	TANGENT	RADIUS
L2		20+00.00 21+00.00	1045875.7267 1045975.7011	1434540.2682 1434542.5295	100.00'	N1°17'45"E			

PRIVATE DRIVE									
NO.		STATION	NORTHING	EASTING	LENGTH	LINE/CHORD BEARING	DELTA	TANGENT	RADIUS
L3		30+00.00 30+75.00	1045963.6576 1046038.6245	1434760.1653 1434762.3936	75.00'	N1°42'09"E			

AS SURVEYED DESCRIPTION:
COMMENCING AT THE INTERSECTION OF THE NORTH RIGHT-OF-WAY LINE OF BROADWAY BOULEVARD (U.S. HIGHWAY 50) AND THE WEST RIGHT-OF-WAY LINE OF HANCOCK AVENUE BEING A STREET LOCATED IN THE CITY OF SEDALIA, MISSOURI; THENCE NORTH 86°45'44" WEST, ALONG SAID NORTH RIGHT-OF-WAY LINE, 273.64 FEET TO THE POINT OF BEGINNING OF THE TRACT OF LAND HEREIN DESCRIBED; THENCE CONTINUING ALONG SAID RIGHT OF WAY LINE NORTH 86°45'44: WEST 749.78 FEET TO A POINT ON THE EASTERN RIGHT OF WAY LINE OF THE KATY TRAIL; THENCE NORTHWARDLY DEPARTING FROM SAID ROAD RIGHT OF WAY ALONG THE KATY TRAIL RIGHT OF WAY NORTH 29°36'19" EAST 898.68 FEET TO A POINT; THENCE NORTH 03°13'22" EAST 86.80 FEET TO A POINT ON THE SOUTHERN RIGHT OF WAY LINE OF 5TH STREET; THENCE EASTWARDLY DEPARTING FROM SAID KATY TRAIL RIGHT OF AWAY ALONG THE SOUTHERN RIGHT OF WAY LINE OF 5TH STREET SOUTH 86°42'57" EAST 331.73 FEET TO A POINT; THENCE SUTHWARDLY DEPARTING FROM SAID RIGHT OF WAY LINE SOUTH 01°44'29" WEST 135.07 FEET TO A POINT; THENCE SOUTH 85°56'51" WEST 29.86 FEET TO A POINT; THENCE SOUTH 01°45'40" WEST 607.14 FEET TO A POINT; THENCE NORTH 86°54'12" WEST 0.30 FEET TO A POINT; THENCE SOUTH 01°44'13" WEST 22.05 FEET TO A POINT; THENCE SOUTH 27°21'59" WEST 57.19 FEET TO A POINT OF CURVATURE; THENCE ALONG A CURVE TO THE LEFT HAVING A RADIUS OF 91.00 FEET, AN ARC LENGTH OF 40.71 FEET AND A CHORD BEARING AND DISTANCE OF SOUTH 14°33'06" WEST 40.37 FEET TO A POINT; THENCE SOUTH 01°44'13" 35.52 FEET TO THE POINT OF BEGINNING.

BENCHMARK INFORMATION: MISSOURI DEPARTMENT OF NATURAL
RESOURCES BENCHMARK PE-27, DESCRIBED AS STANDARD MO DNR
GRS DISK STAMPED "PE-27 2000"
ELEVATION NAVD 1988 = 830.38
HORIZONTAL NAD 1983 = N:1,039,321.73, E: 1,437,987.91.

BASIS OF BEARING FOR THIS SURVEY IS MISSOURI EAST STATE PLANE. SITE WAS SCALED TO GROUND USING A GROUND SCALE FACTOR DERIVED FROM A CENTRAL POINT ON SITE USING TRIMBLE ACCESS SOFTWARE ON A TSC7 DATA COLLECTOR. SAID POINT IS AT
LAT 38°42'18.12252"N
LONG 93°13'17.85694"W
HEIGHT 801.914'
GROUND SCALE FACTOR= 1.0000564410

TOPOGRAPHIC INFORMATION BASED UPON THE ALTA/NSPS LAND TITLE SURVEY CONDUCTED BY CIVIL & ENVIRONMENTAL CONSULTANTS, INC. IN AUGUST 2024.

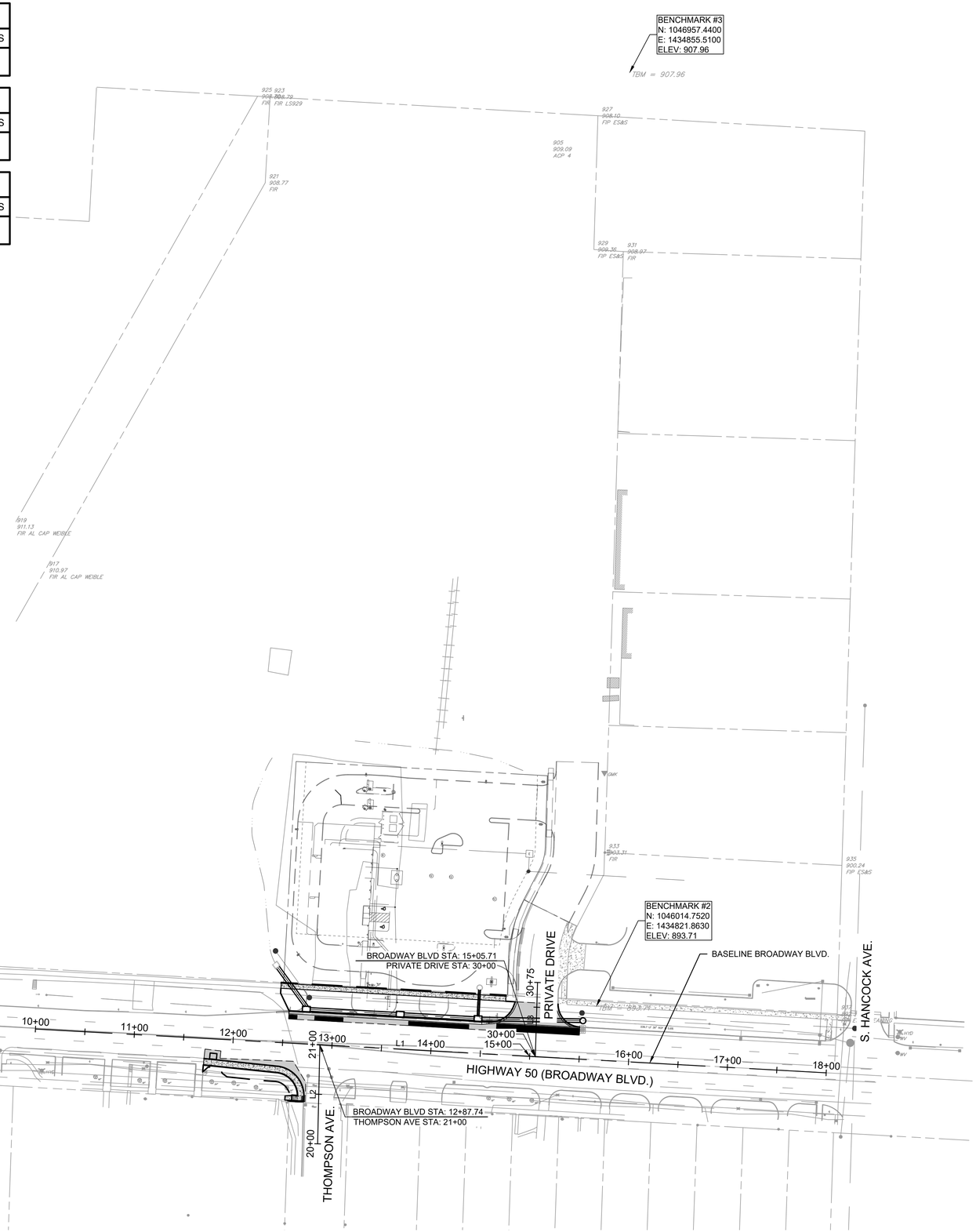

F:\2025\01001-01500\025-01245\40-Design\Auto CAD\Final Plans\Sheets\GENERAL\T_GNL01_01245.dwg
DATE: Jul 25, 2025 9:13pm USER: dcove

olsson
7301 West 133rd Street
Suite 200
Overland Park, KS 66213
olsson.com
TEL 913.381.1170
FAX 913.381.1174
Olsson - Engineering
Missouri COA #001592

STATE OF MISSOURI
REO BRENNEY BATT
NUMBER PE-2010019516
REGISTERED PROFESSIONAL ENGINEER
07/25/2025

REV. NO.	DATE	DESCRIPTION	BY

REVISIONS

GENERAL LAYOUT,
ALIGNMENT DATA & SURVEY CONTROL

US HWY 50 (BROADWAY BLVD.)
PUBLIC IMPROVEMENTS

SEDALIA, MISSOURI

2025

drawn by: DAC
designed by: DAC
project no.: 025-01245
date: 07.25.2025

GENERAL NOTES:

1. THE CONTRACTOR SHALL HAVE ONE (1) SIGNED COPY OF THE PLANS (APPROVED BY THE CITY OF SEDALIA, MO.) AND (1) COPY OF THE APPROPRIATE DESIGN AND CONSTRUCTION STANDARDS AND SPECIFICATIONS AT THE JOB SITE AT ALL TIMES.
2. THE LATEST EDITION OF MoDOT STANDARDS AND SPECIFICATIONS SHALL GOVERN CONSTRUCTION OF THE PROJECT.
3. THE CONTRACTOR SHALL BE RESPONSIBLE FOR OBTAINING ALL REQUIRED PERMITS, OTHERWISE COMPLYING WITH ALL APPLICABLE REGULATIONS GOVERNING THE WORK.
4. CONSTRUCTION OF THE IMPROVEMENTS SHOWN OR IMPLIED BY THIS SET OF DRAWINGS SHALL NOT BE INITIATED OR ANY PART THEREOF UNDERTAKEN UNTIL THE DIRECTOR OF PUBLIC WORKS OR HIS AGENT IS NOTIFIED OF SUCH INTENT AND ALL REQUIRED PERMITS, PROPERTY ACQUISITIONS, SECURITY AND OTHER CONTRACT BONDS, AND CONTRACT AGREEMENTS ARE RECEIVED AND APPROVED BY THE CITY.
5. PRIOR TO ORDERING PRECAST STRUCTURES, SHOP DRAWINGS ARE TO BE SUBMITTED TO THE DESIGN ENGINEER FOR APPROVAL. THE DESIGN ENGINEER SHALL INDICATE APPROVAL OF THE SHOP DRAWINGS AND ADD THE PERMIT TYPE AND NUMBER ON THEM.

MISSOURI ONE CALL SYSTEM

1-800-DIG-RITE or 811

www.mo1call.com

6. ALL EXISTING UTILITIES INDICATED ON THE DRAWINGS ARE ACCORDING TO THE BEST INFORMATION AVAILABLE TO THE ENGINEER; HOWEVER ALL UTILITIES ACTUALLY EXISTING MAY NOT BE SHOWN. UTILITIES DAMAGED THROUGH THE NEGLIGENCE OF THE CONTRACTOR TO OBTAIN THE EXACT LOCATION OF SAME SHALL BE REPAIRED OR REPLACED BY THE CONTRACTOR AT THEIR EXPENSE. ONE-CALL/DIG RITE (1-800-344-7483 AND 1-800-DIG-RITE).
7. ALL PRIVATELY OWNED UTILITIES IN CONFLICT WITH THESE IMPROVEMENTS SHALL BE RELOCATED BY THE APPROPRIATE UTILITY COMPANIES. UTILITY RELOCATIONS WILL BE COMPLETED PRIOR TO THE START OF CONSTRUCTION, WHEN PRACTICABLE.
8. CONSTRUCTION STAKING IS THE RESPONSIBILITY OF THE CONTRACTOR. THE CONTRACTOR SHALL SET THOSE STAKES NECESSARY TO CONSTRUCT THIS PROJECT IN ACCORDANCE WITH THE PLANS.
9. CONTRACTOR SHALL REMOVE THOSE TREES NECESSARY TO ACCOMPLISH THE GRADING WORK SHOWN HEREON. ALL TREES AND BRUSH FROM THE WORK SHALL BE COMPLETELY REMOVED FROM THE SITE BY THE CONTRACTOR. BURNING WILL NOT BE ALLOWED ON THE PROJECT.
10. ALL BACKFILL SHALL BE PLACED AND COMPACTED TO THE REQUIRED DENSITY AS INDICATED IN THE SPECIFICATIONS.
11. ALL ROADWAY EXCAVATION IN ROCK (SHALE, SANDSTONE OR LIMESTONE) WILL BE UNDERCUT NO LESS THAN 6" INCHES FOR THE FULL WIDTH OF THE ROADWAY AND BACKFILLED WITH SUITABLE SOIL OR GRANULAR MATERIAL. THERE WILL BE NO DIRECT PAYMENT FOR ROCK EXCAVATION. PAYMENT FOR ALL MATERIAL WILL BE MADE AT THE CONTRACT BID PRICE FOR UNCLASSIFIED EXCAVATION.
12. THE CONTRACTOR SHALL USE ADEQUATE DUST CONTROL MEASURES DURING ALL PHASES OF THE CONSTRUCTION TO MINIMIZE DUST ON SURROUNDING PROPERTIES AT THE CONTRACTOR'S EXPENSE.
13. DRIVEWAYS, SIDEWALKS, FENCES, SPRINKLER SYSTEMS AND OTHER AREAS DAMAGED BY THE CONTRACTOR SHALL BE RESTORED TO A CONDITION EQUAL TO OR BETTER THAN THAT EXISTING BEFORE DAMAGE OCCURRED. THIS WORK WILL NOT BE PAID FOR DIRECTLY, BUT IS CONSIDERED SUBSIDIARY TO OTHER BID ITEMS.
14. WHERE THE NEW STREET IS TO CONNECT TO AN EXISTING STREET ALL DETERIORATED OR CRACKED ASPHALT WITHIN TWO (2) FEET OF THE CONNECTION POINT SHALL BE REMOVED TO A DEPTH WHERE SOUND MATERIAL IS FOUND. IF FULL-DEPTH PAVEMENT REMOVAL IS REQUIRED, THE SUB-GRADE SHALL BE RE-COMPACTED TO A MINIMUM OF 95% OF STANDARD PROCTOR DENSITY (ASTM D-698).
15. ALL EXISTING FENCING, DRIVEWAYS, SIDEWALKS AND OTHER ITEMS WITHIN THE CONSTRUCTION LIMITS DAMAGED OR REMOVED BY THE CONTRACTOR, SHALL BE REPLACED WITH NEW MATERIALS. ALL FENCE REPLACEMENT SHOULD BE RELOCATED TO THE PROPERTY LINES UNLESS THE EXISTING FENCE WAS LOCATED INSIDE THE PROPERTY LINES, THEN THE FENCE SHOULD BE REPLACED IN ITS ORIGINAL LOCATION. FENCE CORNERS OF FENCES TO BE RELOCATED AT THE ORIGINAL LOCATIONS SHALL BE REFERENCE OUT BY THE CONTRACTOR BEFORE REMOVAL. REMOVALS SHALL BE AS SHOWN ON THESE PLANS, OR APPROVED BY THE CITY PRIOR TO REMOVAL. REMOVALS NOT PRE-APPROVED WILL BE REPLACED AT THE CONTRACTOR'S EXPENSE.
16. REMOVAL OF EXISTING STORM DRAINAGE STRUCTURES AND OTHER EXISTING PHYSICAL FEATURES OF THE EXISTING ROADWAY SHALL BE CONSIDERED INCIDENTAL AND REMOVED AS A SUBSIDIARY ITEM TO CLEARING, GRUBBING, DEMOLITION, & REMOVALS. ALL WASTE SHALL BE TRANSPORTED TO A CITY APPROVED DUMP SITE FOR DISPOSAL.
17. ALL EXISTING WATER VALVES, METERS, FIRE HYDRANTS AND BLOW-OFF ASSEMBLIES WITHIN THE LIMITS OF THE PROPOSED PAVEMENT SHALL BE RELOCATED OR ADJUSTED TO GRADE BY THE CONTRACTOR. WATER METERS SHALL BE RELOCATED SO THAT THEY ARE WITHIN THE PUBLIC RIGHT-OF -WAY, APPROXIMATELY ONE FOOT FROM RIGHT-OF WAY LINE. WATER SERVICE LINES AFFECTED BY METER RELOCATION AND/OR THE WATER MAIN RELOCATIONS SHOWN IN THESE PLANS SHALL BE RECONNECTED BY THE CONTRACTOR. THE CONTRACTOR SHALL NOTIFY RESIDENTS OF ANY WATER SERVICE INTERRUPTIONS 48 HOURS PRIOR TO INTERRUPTING THE SERVICE. ANY SERVICE INTERRUPTIONS MUST BE RESTORED THE SAME DAY.
18. THE CONTRACTOR SHALL BE RESPONSIBLE FOR PRESERVING PROPERTY IRONS. THE CONTRACTOR SHALL BE REQUIRED TO RE-ESTABLISH ANY PROPERTY IRONS AND SURVEY MONUMENTS WHICH HAVE BEEN DAMAGED OR DESTROYED BY THIS CONSTRUCTION OPERATION INCLUDING THOSE BURIED WITH EMBANKMENT OR REMOVED DURING EXCAVATION. SUCH IRONS AND MONUMENTS SHALL BE RE-ESTABLISHED BY A LICENSED LAND SURVEYOR. REPLACEMENT OF PROPERTY IRONS AND MONUMENTS SHALL BE SUBSIDIARY TO OTHER BID ITEMS.
19. THE TOP 6" OF ALL DISTURBED AREAS THAT ARE TO BE SEEDED OR SODDED SHALL BE OF MATERIAL SUITABLE FOR SUSTAINING GRASS. THE GRADED SURFACE SHALL BE MADE FREE OF ROCK, CONCRETE, BRICK, OR FRAGMENTS THEREOF, OR RUBBISH AND SHALL BE FINISHED TO THE LINES, GRADES, AND CROSS-SECTION INDICATED ON THE PLANS.
20. ALL WATERLINE MAINS, SANITARY SEWER MAINS AND STORM WATER DRAINAGE CROSSINGS UNDER PROPOSED STREET PAVEMENTS SHALL BE IN PLACE PRIOR TO THE PLACEMENT OF THE ASPHALT SURFACE OR BASE COURSES.
21. APPROPRIATE TRAFFIC CONTROL DEVICES, SIGNAGE, AND PAVEMENT MARKINGS SHALL BE ESTABLISHED AND MAINTAINED THROUGHOUT THE PROJECT IN ACCORDANCE WITH THE CONTRACT DOCUMENTS AND MUTCD.
22. HANDICAP RAMPS SHALL BE CONSTRUCTED IN ACCORDANCE WITH ADA REQUIREMENTS AT ALL LOCATIONS WHERE POSSIBLE.
23. THE CONTRACTOR MUST REMOVE AT THEIR COST ANY BAD SUBSURFACE SOIL WHICH WOULD NOT BE ABLE TO SUPPORT ANY PROPOSED PUBLIC IMPROVEMENT. BACKFILL SHOULD BE ACCOMPLISHED IN ACCORDANCE WITH THE LATEST EDITION OF MoDOT STANDARDS AND SPECIFICATIONS.
24. ALL SIGNS INSTALLED, INCLUDING STOP SIGNS, KEEP RIGHT SIGNS AND OBJECT MARKERS ALONG WITH THE SIGN POSTS SHALL CONFORM TO THE LATEST EDITION OF THE MANUAL ON UNIFORM TRAFFIC CONTROL DEVICES (MUTCD) AND APWA GUIDELINES.
25. SAW CUTS SHALL BE FULL DEPTH. THIS SHALL BE SUBSIDIARY TO PAVING ITEMS.
26. ALL EXISTING STRUCTURES WITHIN THE CONSTRUCTION LIMITS SHALL BE REMOVED, UNLESS OTHERWISE NOTED ON THE PLANS. THIS WORK SHALL BE PAID FOR UNDER THE BID ITEM "REMOVAL OF EXISTING STRUCTURES".
27. THE CONTRACTOR SHALL AT NO TIME LEAVE EQUIPMENT, MATERIALS OR DEBRIS WITHIN 4' OF TRAVELED WAY OR LOCATIONS THAT COULD OBSTRUCT INTERSECTION SIGHT DISTANCE, OBSTRUCT ANY EXISTING CAPACITY OF STORM SEWER SYSTEM, OR CAUSE FLOODING OR EROSION TO RESIDENCES.
28. THE CONTRACTOR SHALL POTHOLE AND SURVEY ALL UTILITY CROSSINGS PRIOR TO CONSTRUCTION OF ANY PORTION OF STORM SEWER, UNDERDRAINS, CONDUIT, AND ANY OTHER SUBSURFACE ELEMENTS OF THE PROJECT. THIS SURVEY INFORMATION SHALL BE FORWARDED TO THE ENGINEER FOR REVIEW. THE CONTRACTOR SHALL NOT BEGIN CONSTRUCTION ON ANY SUBSURFACE ELEMENT ON THE PROJECT WITHOUT THE APPROVAL OF THE ENGINEER. THIS ITEM SHALL BE SUBSIDIARY TO OTHER BID ITEMS.
30. THE CONTRACTOR SHALL SUPPORT AND PROTECT ALL EXPOSED UTILITIES IN TRENCHES AND BRACE ALL POLES AS REQUIRED BY THE ENGINEER.
31. REINFORCED CONCRETE PIPE SHALL BE CLASS III, UNLESS OTHERWISE NOTED ON THE PLANS.
32. CONTACT THE MISSOURI DEPARTMENT OF TRANSPORTATION PERMITS AT 816-607-2187 AT LEAST 24 HOURS PRIOR TO BEGINNING WORK AND FOR REQUIRED INSPECTIONS ON ORTIONS IN THE MoDOT RIGHT OF WAY.
33. ANY WORK PERFORMED WITHIN MoDOT RIGHT OF WAY SHALL CONFORM TO MoDOT STANDARDS AND SPECIFICATIONS. IN ADDITION, THE CONTRACTOR SHALL PROVIDE MATERIALS CERTIFICATION AND COMPACTION TESTING THAT COMPLIES WITH MoDOT SPECIFICATIONS.

BEST MANAGEMENT PRACTICES:

1. PRIOR TO LAND DISTURBANCE ACTIVITIES, THE CONTRACTOR SHALL:

   A. PRIOR TO BEGINNING EXCAVATION, THE CONTRACTOR SHALL INSTALL SILT FENCE ALONG THE CONSTRUCTION LIMITS TO DIVERT CLEAN WATER AWAY FROM THE DISTURBED SITE. THE CONTRACTOR AND THE ENGINEERS REPRESENTATIVE SHALL USE DISCRETION IN THE PLACEMENT OF THE SILT FENCE AS TO PREVENT FLOODING IN UNDESIRABLE LOCATIONS.

   B. CONSTRUCT A STABILIZED ENTRANCE/PARKING/DELIVERY AREA AND INSTALL ALL PERIMETER SEDIMENT CONTROLS ON THE SITE.

   C. INSTALL AND REQUEST THE INSPECTION OF THE PRE-CONSTRUCTION EROSION AND SEDIMENT CONTROL MEASURES DESIGNATED ON THE APPROVED EROSION AND SEDIMENT CONTROL PLAN. LAND DISTURBANCE WORK SHALL NOT PROCEED UNTIL THERE IS A SATISFACTORY INSPECTION.

   D. TEMPORARY FENCING SHALL BE INSTALLED ALONG ALL TEMPORARY EASEMENTS AND MAINTAINED FOR THE DURATION OF THE PROJECT.

2. THE CONTRACTOR SHALL MINIMIZE THE AREA DISTURBED DURING EXCAVATION AND CONSTRUCTION OF THE STORM SEWER PIPES AND STRUCTURES. FOLLOWING THE CONSTRUCTION OF THE STORM SEWER LINE, THE CONTRACTOR SHALL INSTALL THE TEMPORARY DITCH CHECKS AT 100' INTERVALS WITHIN TWO WORKING DAYS AFTER CONSTRUCTION ACTIVITY HAS CEASED IN THAT AREA. THE TEMPORARY DITCH CHECKS SHALL REMAIN IN PLACE UNTIL SOD HAS BEEN PLACED ON THE DISTURBED AREAS. INLETS SHALL BE PROTECTED WITH SEDIMENT BARRIERS AS SHOWN ON THE DETAIL.
3. THE CONTRACTOR SHALL PERFORM INSPECTIONS OF EROSION AND SEDIMENT CONTROL MEASURES AT LEAST ONCE PER WEEK AND WITHIN 24 HOURS FOLLOWING EACH RAINFALL EVENT OF 1/2" OR MORE WITHIN ANY 24-HOUR PERIOD.
4. THE CONTRACTOR SHALL MAINTAIN AN INSPECTION LOG INCLUDING THE INSPECTOR'S NAME, DATE OF INSPECTION, OBSERVATIONS AS TO THE EFFECTIVENESS OF THE EROSION AND SEDIMENT CONTROL MEASURES, ACTIONS NECESSARY TO CORRECT DEFICIENCIES, WHEN THE DEFICIENCIES WERE CORRECTED, AND THE SIGNATURE OF THE PERSON PERFORMING THE INSPECTION. THE LOG SHALL BE AVAILABLE FOR REVIEW BY THE CITY OF SEDALIA AND THE STATE OF MISSOURI.
5. THE CONTRACTOR SHALL MAINTAIN INSTALLED EROSION AND SEDIMENT CONTROL DEVICES IN A MANNER THAT PRESERVES THEIR EFFECTIVENESS FOR PREVENTING SEDIMENT FROM LEAVING THE SITE OR ENTERING A SENSITIVE AREA SUCH AS A NATURAL STREAM CORRIDOR, AREAS OF THE SITE INTENDED TO BE LEFT UNDISTURBED, A STORM SEWER, OR AN ON-SITE DRAINAGE CHANNEL.
6. THE CONTRACTOR IS RESPONSIBLE FOR PROVIDING EROSION AND SEDIMENT CONTROL FOR THE DURATION OF A PROJECT. IF MoDOT OR THE CITY DETERMINES THAT THE BMP'S IN PLACE DO NOT PROVIDE ADEQUATE EROSION AND SEDIMENT CONTROL AT ANY TIME DURING THE PROJECT, THE CONTRACTOR SHALL INSTALL ADDITIONAL OR ALTERNATE MEASURES THAT PROVIDE EFFECTIVE CONTROL.
7. EXCAVATED MATERIAL AND TOPSOIL STAGING SHALL NOT BE PERMITTED IN STREET RIGHT-OF-WAY AND SHALL BE CONFINED TO DRAINAGE EASEMENTS AND THOSE AREAS IDENTIFIED ON THIS PLAN. STOCKPILE AREAS SHALL BE PROTECTED WITH SILT FENCING TO PREVENT SOIL LOSS TO NEARBY STORM DRAINAGE SYSTEMS AND PROPERTY.
8. PROJECT SHALL BE CONSTRUCTED DOWNSTREAM TO UPSTREAM. THE AMOUNT OF DISTURBED AREA LEFT EXPOSED SHALL BE MINIMIZED.
9. ALL AREA INLETS AND CURB INLETS SHALL BE PROTECTED WITH TEMPORARY INLET SEDIMENT BARRIERS PRIOR TO TOP SLAB INSTALLATION AS WELL AS AFTER TOP SLAB INSTALLATION UNTIL SODDING AND PAVING IS COMPLETE.
10. SODDING SHALL OCCUR IN PHASES AS DEPICTED ON THIS PLAN IN ACCORDANCE TO THE LATEST EDITION OF MoDOT STANDARDS AND SPECIFICATIONS.

olsson

7301 West 133rd Street
Suite 200
Overland Park, KS 66213

olsson.com
TEL 913.381.1170
FAX 913.381.1174

Olsson - Engineering
Missouri COA #001592

STATE OF MISSOURI
AEO BRENNEY BATT
NUMBER PE-2010019516
PROFESSIONAL ENGINEER
07/25/2025

REV. NO.	DATE	DESCRIPTION	BY

REVISIONS

GENERAL NOTES

US HWY 50 (BROADWAY BLVD.)
PUBLIC IMPROVEMENTS

SEDALIA, MISSOURI

2025

drawn by: DAC
designed by: DAC
project no.: 025-01245
date: 07.25.2025

F:\2025\01001-01500\025-01245\40-Design\AutoCAD\Final Plans\Sheets\GENERAL\IT_GEN01_01245.dwg
DATE: Jul 25, 2025 9:13pm USER: dcove

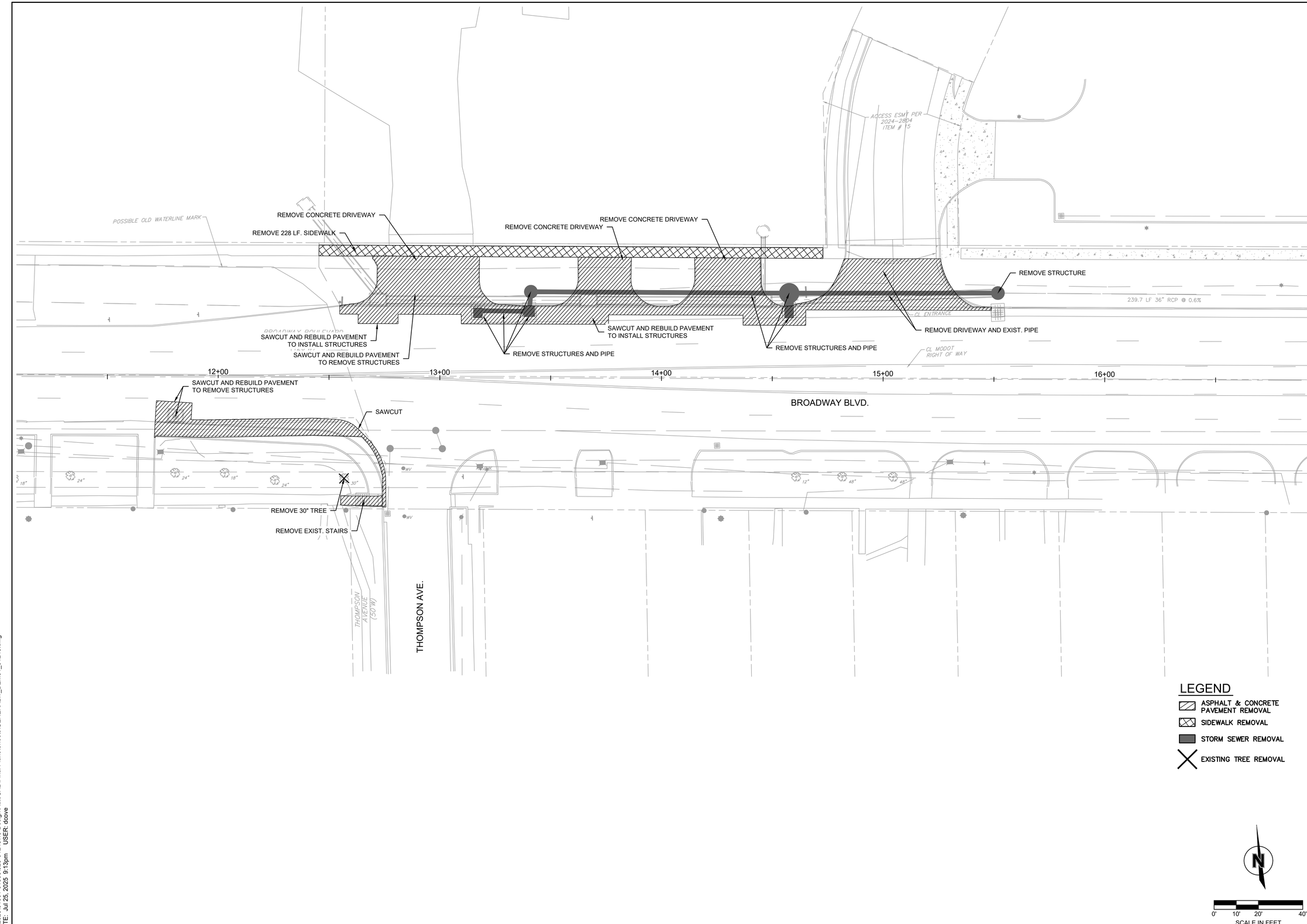

F:\2025\01001-01500\025-01245\40-Design\AutoCAD\Final Plans\Sheets\GENERAL\T_DEM01_01245.dwg
DATE: Jul 25, 2025 9:13pm USER: dcove

olsson

7301 West 133rd Street
Suite 200
Overland Park, KS 66213

olsson.com
TEL 913.381.1170
FAX 913.381.1174

Olsson - Engineering
Missouri COA #001592

STATE OF MISSOURI
REO A. BRENNEY BATTY
NUMBER PE-2010019516
REGISTERED PROFESSIONAL ENGINEER
07/25/2025

REV. NO.	DATE	DESCRIPTION	BY

REVISIONS

DEMOLITION AND REMOVALS

US HWY 50 (BROADWAY BLVD.) PUBLIC IMPROVEMENTS

SEDALIA, MISSOURI

2025

drawn by: DAC
designed by: DAC
project no.: 025-01245
date: 07.25.2025

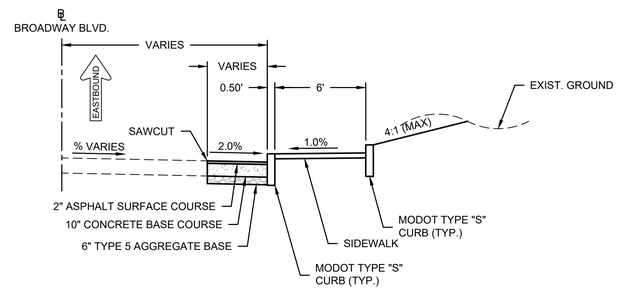

TYPICAL SECTION
BROADWAY BLVD.

NOT TO SCALE

STA. 11+71.30 TO STA. 12+68.14

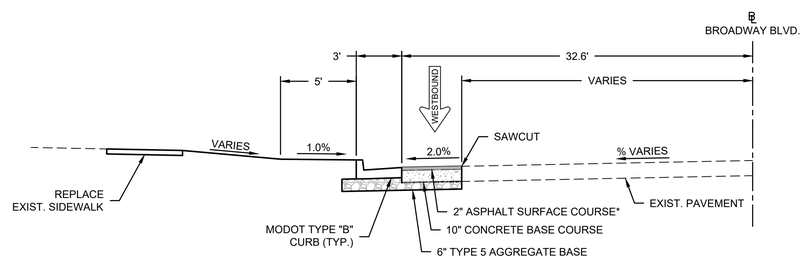

*2" MILL AND OVERLAY IN AREAS NOTED ON SHEET 6 ROADWAY PLAN.

TYPICAL SECTION
BROADWAY BLVD.

NOT TO SCALE

STA. 12+54.75 TO STA. 15+48.78

olsson

7301 West 133rd Street
Suite 200
Overland Park, KS 66213

olsson.com
TEL 913.381.1170
FAX 913.381.1174

Olsson - Engineering
Missouri COA #001592

STATE OF MISSOURI
REO A. BRENNEY BATT
NUMBER PE-2010019516
REGISTERED PROFESSIONAL ENGINEER
07/25/2025

REV. NO.	DATE	DESCRIPTION	BY

REVISIONS

TYPICAL SECTIONS

US HWY 50 (BROADWAY BLVD.)
PUBLIC IMPROVEMENTS

SEDALIA, MISSOURI

2025

drawn by: DAC
designed by: DAC
project no.: 025-01245
date: 07.25.2025

SHEET
5 of 33

F:\2025\01001-01500\025-01245\40-Design\AutoCAD\Final Plans\Sheets\GENERAL\T_TYP01_01245.dwg
DATE: Jul 25, 2025 9:13pm USER: dcove

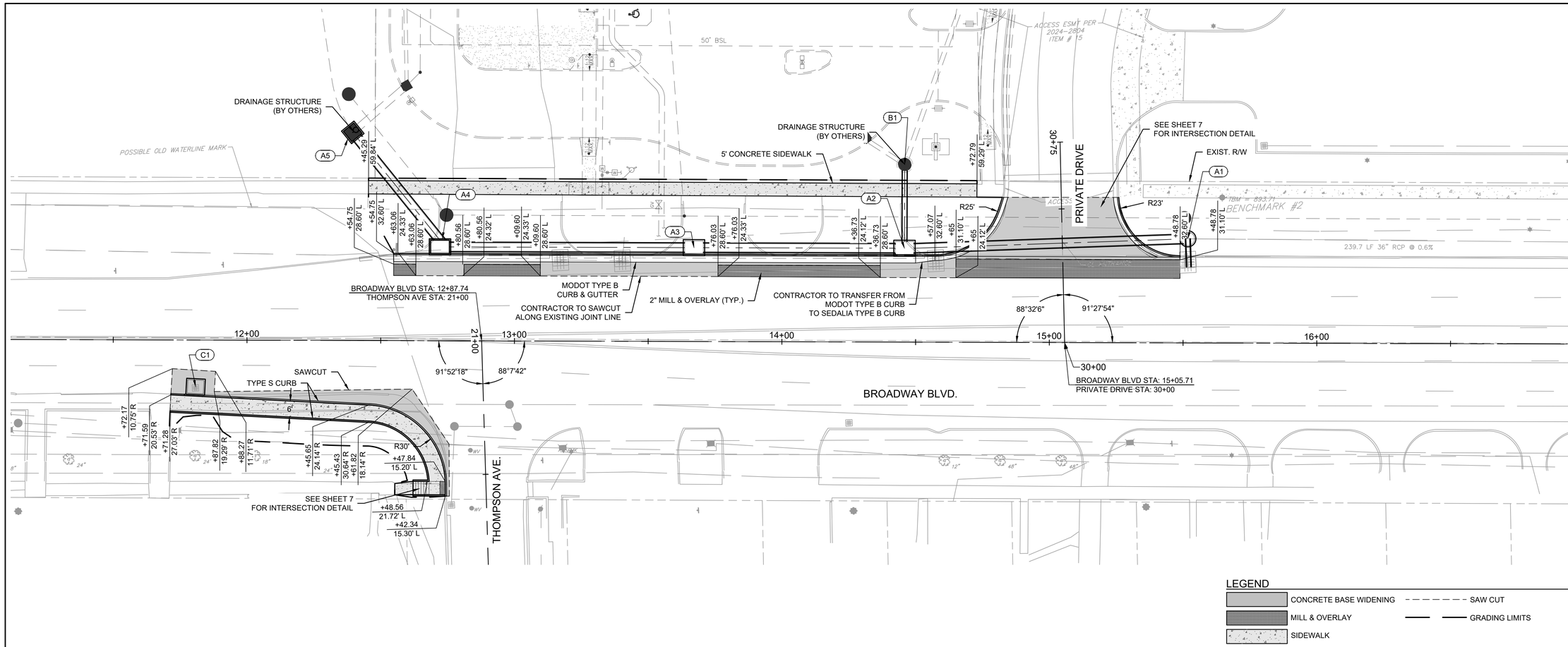

LEGEND

- CONCRETE BASE WIDENING
- MILL & OVERLAY
- SIDEWALK
- SAW CUT
- GRADING LIMITS

0' 10' 20' 40'
SCALE IN FEET

olsson

7301 West 133rd Street
Suite 200
Overland Park, KS 66213

olsson.com
TEL 913.381.1170
FAX 913.381.1174

Olsson - Engineering
Missouri COA #001592

STATE OF MISSOURI
REO BRENNEY BATT
NUMBER PE-2010019516
REGISTERED PROFESSIONAL ENGINEER
07/25/2025

REV. NO.	DATE	DESCRIPTION	BY

REVISIONS

BROADWAY ROADWAY PLAN

US HWY 50 (BROADWAY BLVD.)
PUBLIC IMPROVEMENTS

SEDALIA, MISSOURI

2025

drawn by: DAC
designed by: DAC
project no.: 025-01245
date: 07.25.2025

SHEET
6 of 33

F:\2025\01001-01500\025-01245\40-Design\AutoCAD\Final Plans\Sheets\PLAN & PROFILES\T_RPP01-01245.dwg
DATE: Jul 25, 2025 9:14pm USER: dcove

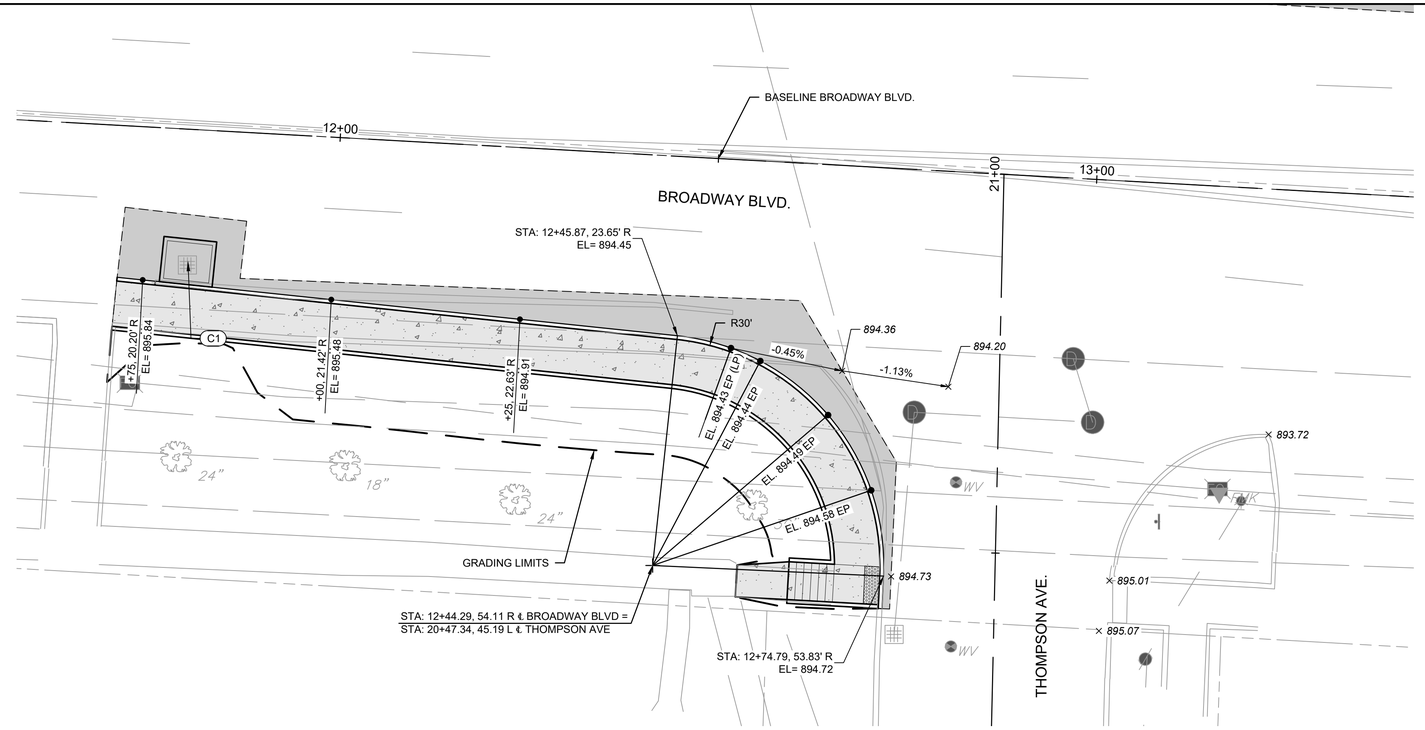

BROADWAY BLVD. & THOMPSON AVE. INTERSECTION DETAIL

0' 5' 10' 20'
SCALE IN FEET

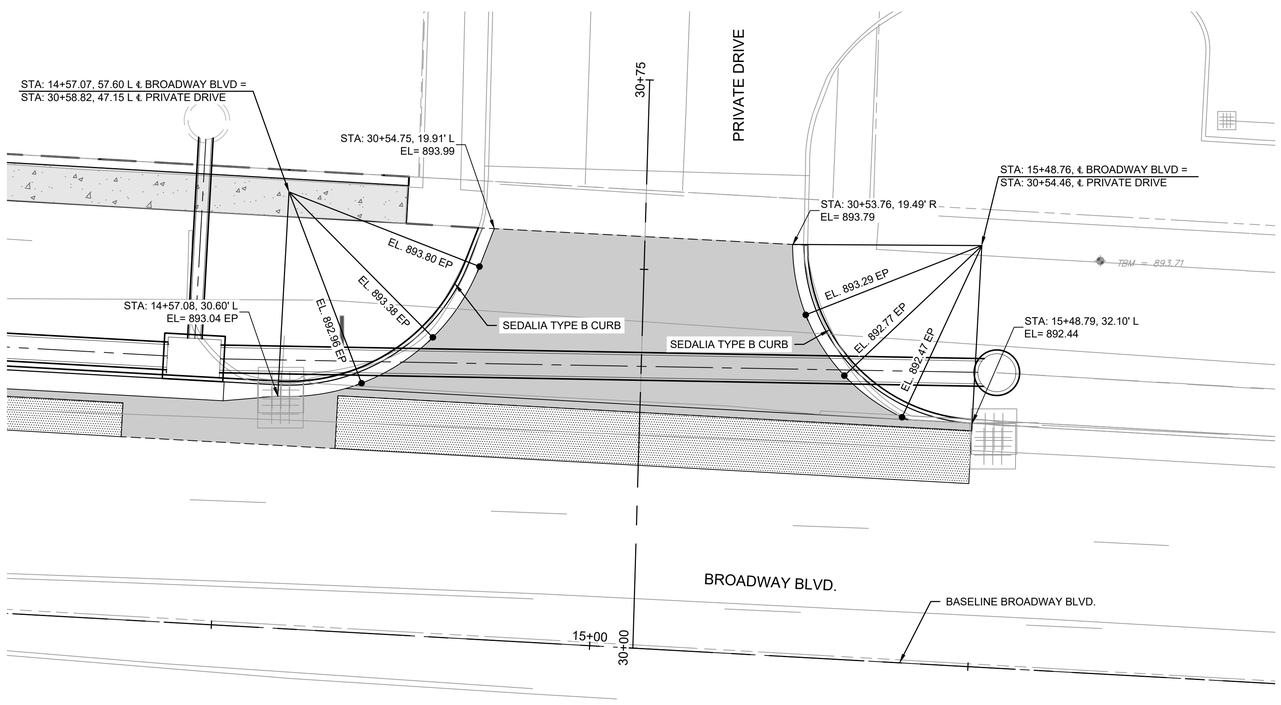

BROADWAY BLVD. & PRIVATE DRIVE INTERSECTION DETAIL

0' 5' 10' 20'
SCALE IN FEET

STAIR DETAIL

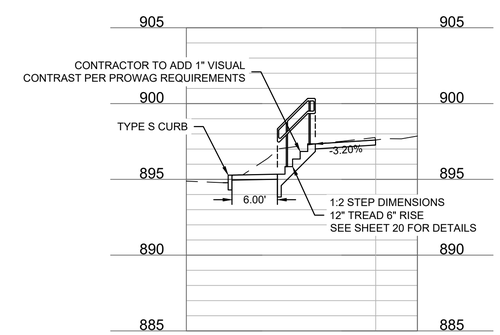

0' 10' 20' 40'
SCALE IN FEET

10' 5' 2.5' 0'

olsson

7301 West 133rd Street
Suite 200
Overland Park, KS 66213

olsson.com
TEL 913.381.1170
FAX 913.381.1174

Olsson - Engineering
Missouri COA #001592

STATE OF MISSOURI
REO A. BRENNEY
NUMBER PE-2010019516
REGISTERED PROFESSIONAL ENGINEER
07/25/2025

REV. NO.	DATE	DESCRIPTION	BY

REVISIONS

INTERSECTION DETAILS

US HWY 50 (BROADWAY BLVD.)
PUBLIC IMPROVEMENTS

SEDALIA, MISSOURI

2025

drawn by: DAC
designed by: DAC
project no.: 025-01245
date: 07.25.2025

SHEET
7 of 33

F:\2025\01001-01500\025-01245\4-Design\AutoCAD\Final Plans\Sheets\INTERSECTION LAYOUTS\T_INT01_01245.dwg
DATE: Jul 25, 2025 9:14pm USER: ddove

A5
STA: 12+39.33, 77.85' L
AREA INLET (BY OTHERS)
INSTALL 49.4 L.F. 36" RCP (SE)

A4
STA: 12+72.06, 35.10' L
CONST. 7'X5' MODOT TYPE T INLET
INSTALL 88.0 L.F. 36" RCP (E)
SEE SHEETS 17-19

A3
STA: 13+67.03, 35.10' L
CONST. 7'X5' MODOT TYPE T INLET
INSTALL 71.7 L.F. 36" RCP (E)
SEE SHEETS 17-19

A2
STA: 14+45.73, 35.10' L
CONST. 7'X5' MODOT TYPE T INLET
INSTALL 100.0 L.F. 36" RCP (E)
SEE SHEETS 17-19

B1
STA: 14+45.73, 66.45' L
60" MH (BY OTHERS)
INSTALL 26.4 L.F. 18" RCP (S)

A1
STA: 15+51.67, 38.94' L
CONST. 60" MH
SEE SHEET X AND X

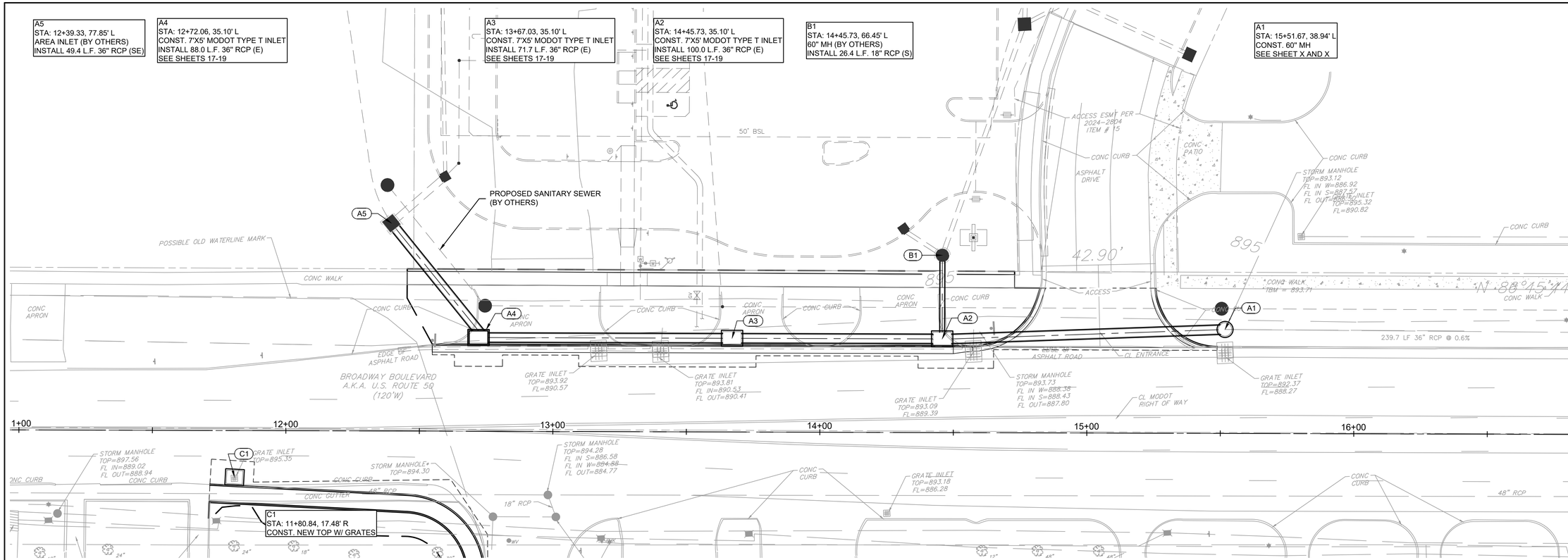

A LINE

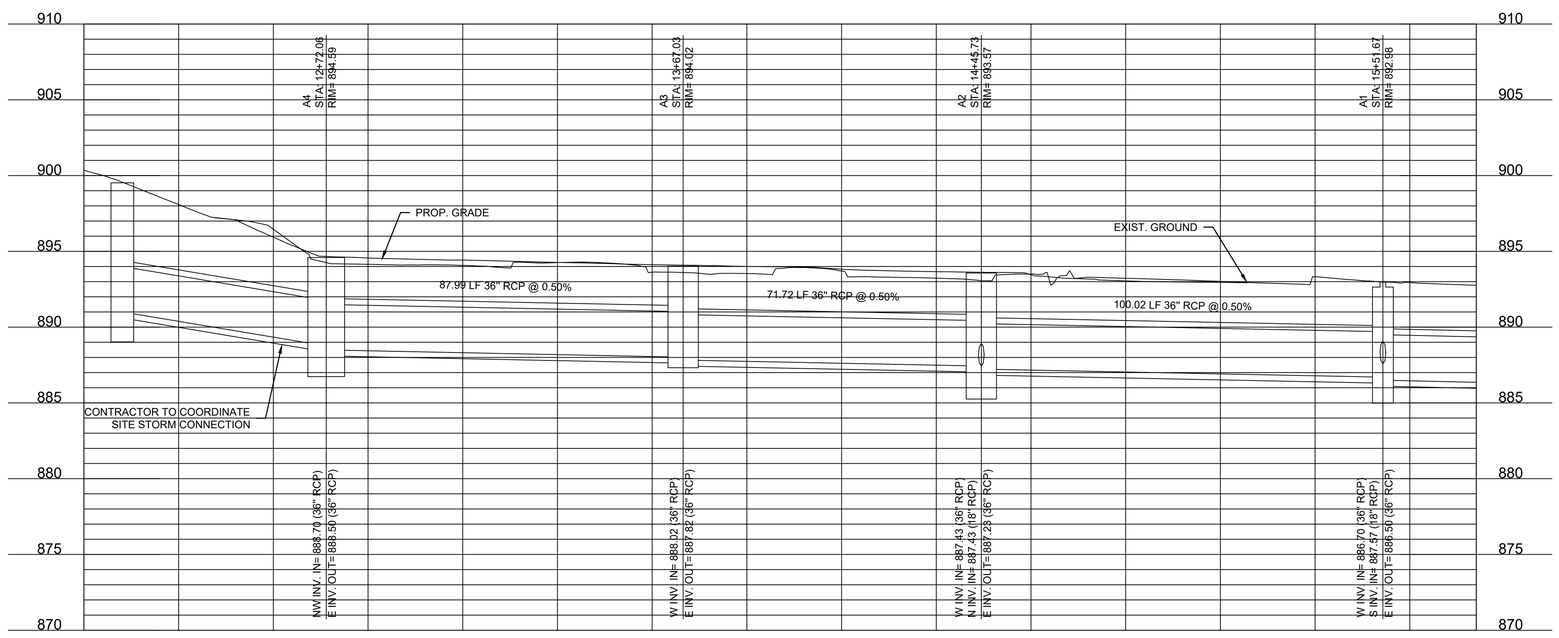

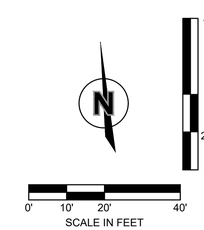

olsson
7301 West 133rd Street
Suite 200
Overland Park, KS 66213
olsson.com
TEL 913.381.1170
FAX 913.381.1174
Olsson - Engineering
Missouri COA #001592

STATE OF MISSOURI
REO BRENNEN DAFT
NUMBER PE-2010019516
REGISTERED PROFESSIONAL ENGINEER
07/25/2025

REV. NO.	DATE	DESCRIPTION	BY

REVISIONS

STORM SYSTEM PLAN AND PROFILES

US HWY 50 (BROADWAY BLVD.)
PUBLIC IMPROVEMENTS

SEDALIA, MISSOURI

2025

drawn by: DAC
designed by: DAC
project no.: 025-01245
date: 07.25.2025

SHEET
8 of 33

F:\2025\01001-01500\025-01245\4-Design\AutoCAD\Final Plans\Sheets\STORM SEWER\T_STM01-01245.dwg
DATE: Jul 25, 2025 9:14pm USER: dcove

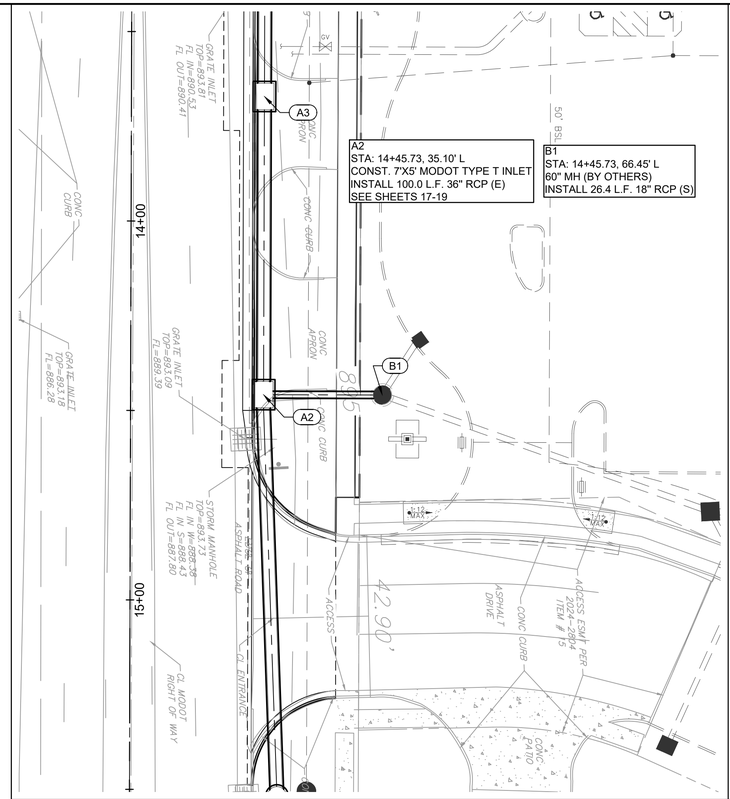

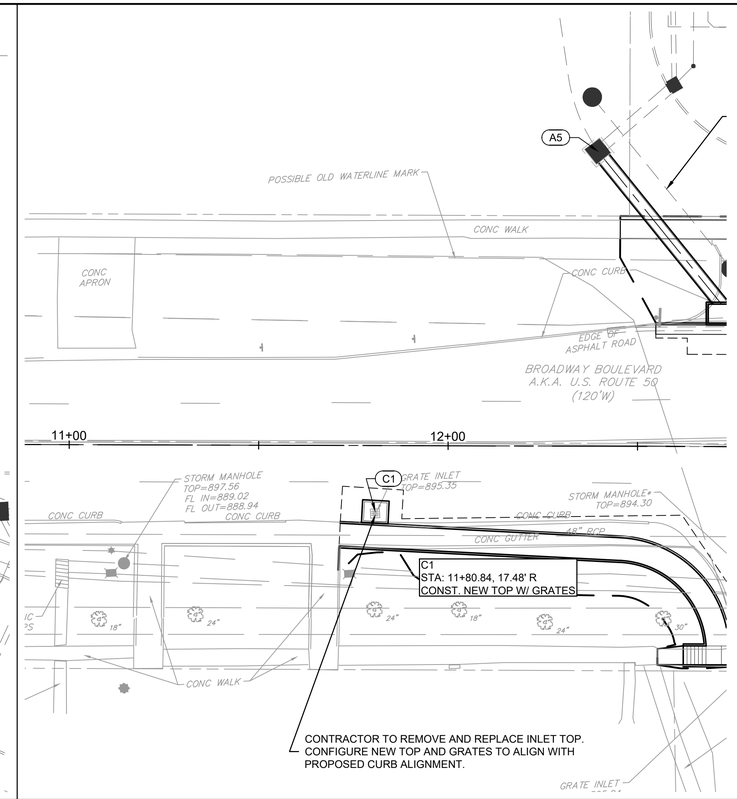

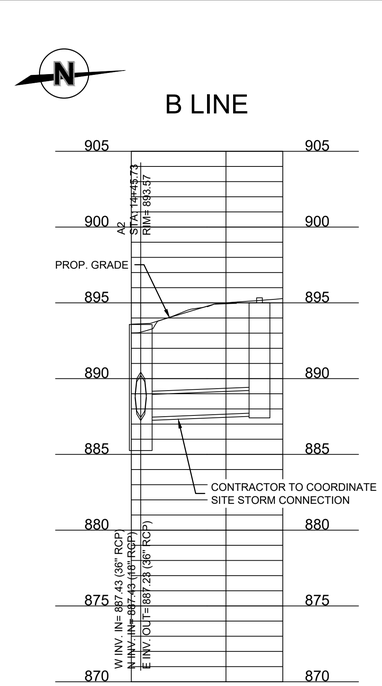

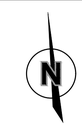

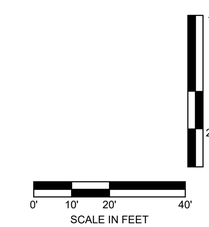

olsson
7301 West 133rd Street
Suite 200
Overland Park, KS 66213
olsson.com
TEL 913.381.1170
FAX 913.381.1174
Olsson - Engineering
Missouri COA #001592

STATE OF MISSOURI
REO A. BRINKEY III
NUMBER PE-2010019516
REGISTERED PROFESSIONAL ENGINEER
07/25/2025

REV. NO.	DATE	DESCRIPTION	BY

REVISIONS

STORM SYSTEM PLAN AND PROFILES

US HWY 50 (BROADWAY BLVD.)
PUBLIC IMPROVEMENTS

SEDALIA, MISSOURI

2025

drawn by: DAC
designed by: DAC
project no.: 025-01245
date: 07.25.2025

SHEET
9 of 33

F:\2025\01001-01500\025-01245\40-Design\AutoCAD\Final Plans\Sheets\STORM SEWER\T_STM01-01245.dwg
DATE: Jul 25, 2025 9:14pm USER: dcove

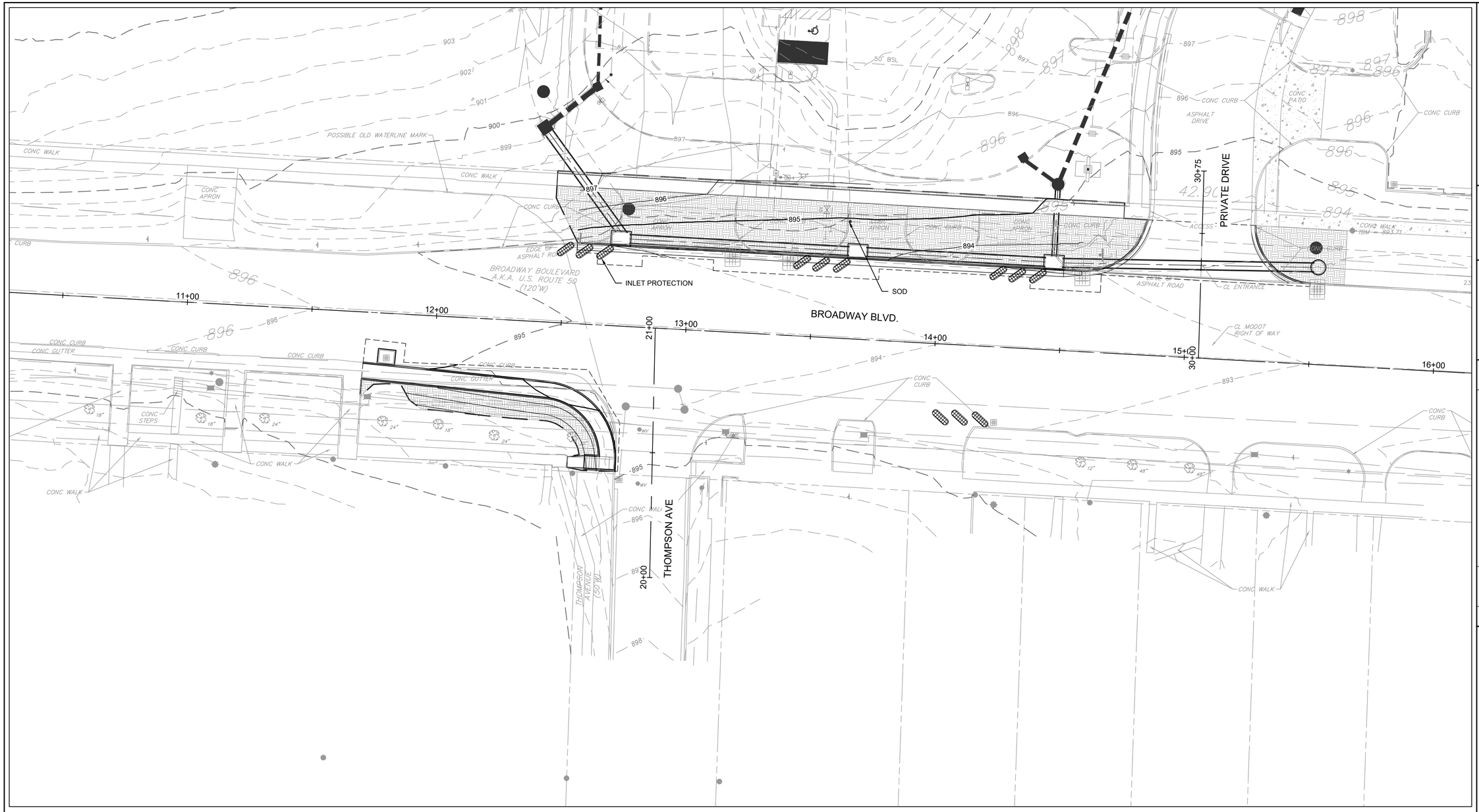

EROSION AND SEDIMENT CONTROL STAGING CHART				
PROJECT STAGE	EROSION CONTROL PLAN BMP REFERENCE NO.	BMP DESCRIPTION	REMOVE AFTER STAGE	NOTES:
I - STORM SEWER INSTALLATION PRIOR TO ROADWAY GRADING	1	STAGING AREA	III	CONTRACTOR TO DESIGNATE LOCATIONS
	2	TEMPORARY CONSTRUCTION ENTRANCE	III	SEE SHEET X FOR DETAIL
	3	CONCRETE WASHOUT	III	SEE SHEET X FOR DETAIL
	4	TEMP. ROCK DITCH CHECK AND/OR BIO LOGS	IV	SEE SHEET X FOR DETAIL
	5	SILT FENCE/OR BIODEGRADABLE LOGS (9")	IV	SEE SHEET X FOR DETAIL
	6	CURB INLET PROTECTION	III	SEE SHEET X FOR DETAIL
	7	AREA INLET PROTECTION	IV	SEE SHEET X FOR DETAIL
II - ROADWAY GRADING & SWALE GRADING	8	SEED & TURF REINFORCEMENT MAT (TRM)	N/A	SEE SHEET X FOR DETAIL
	9	TEMP. ROCK DITCH CHECK AND/OR BIO LOGS	IV	SEE SHEET X FOR DETAIL
III - PAVING				
IV - STABILIZE SITE	10	SEED & SOD	N/A	SEE SHEET X FOR DETAIL

LEGEND

SILT FENCE

INLET PROTECTION

SOD

N

0' 10' 20' 40'
SCALE IN FEET

olsson
7301 West 133rd Street
Suite 200
Overland Park, KS 66213
olsson.com
TEL 913.381.1170
FAX 913.381.1174
Olsson - Engineering
Missouri COA #001592

STATE OF MISSOURI
REO A. BRONNEY, JR.
NUMBER PE-2010019516
PROFESSIONAL ENGINEER
07/25/2025

REV. NO.	DATE	DESCRIPTION	BY

REVISIONS

EROSION CONTROL PLANS

US HWY 50 (BROADWAY BLVD.)
PUBLIC IMPROVEMENTS

2025

SEDALIA, MISSOURI

drawn by: DAC
designed by: DAC
project no.: 025-01245
date: 07.25.2025

SHEET
10 of 33

F:\2025\01001-01500\025-01245\40-Design\AutoCAD\Final Plans\Sheets\EROSION CONTROL PLANS\T_ERC01_01245.dwg
DATE: Jul 25, 2025 9:14pm USER: dcove

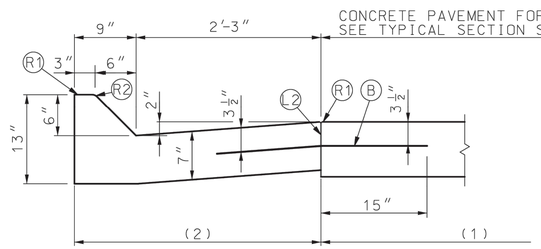

TYPE A
(MOUNTABLE)

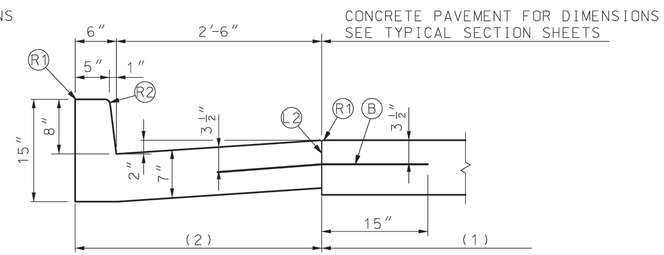

TYPE B
(BARRIER)

CURB & GUTTER

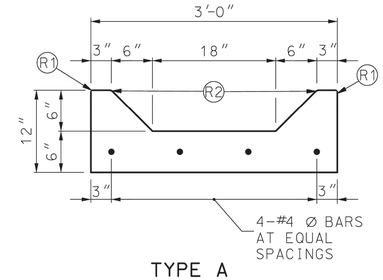

TYPE A

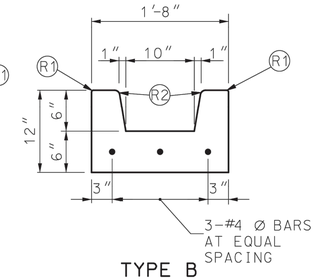

TYPE B

GUTTERS

SEE STANDARD PLAN 607.11 FOR MODIFIED TYPE A AND B GUTTERS

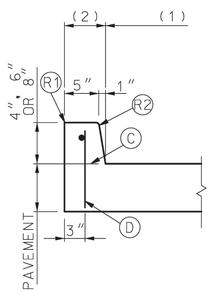

TYPE A
(INTEGRAL)

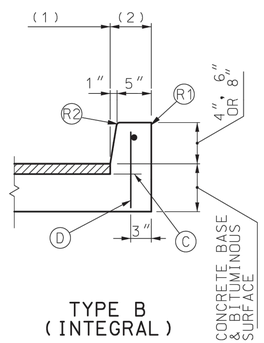

TYPE B
(INTEGRAL)

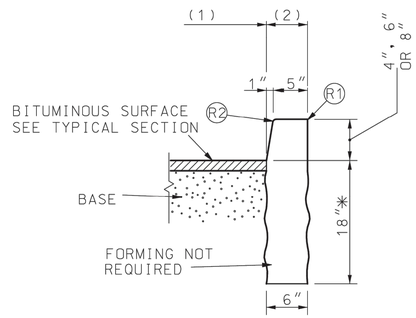

TYPE S
(SEPARATED)

✳ DEPTH MAY BE REDUCED IF KEYED 6″ IN ROCK

BARRIER CURBS

LEGEND

(B) TIE BARS - 30″ X #5 Ø AT 30″ CTRS.

(C) PERMISSIBLE CONSTRUCTION JOINT. IF CONSTRUCTED IN THIS MANNER LONGITUDINAL AND TIE BARS MUST BE USED.

(D) #3 OR #4 Ø EPOXY COATED LONGITUDINAL AND TIE BARS. LONGITUDINAL BAR GAPPED 4″ AT JOINTS AND ANY SPLICES LAPPED 8″. TIE BARS AT 24″ CENTERS AND LENGTH EQUALS THICKNESS OF PAVEMENT PLUS HEIGHT OF CURB MINUS 3″. MINIMUM 1″ COVER OVER ALL BARS.

(L2) LONGITUDINAL JOINT WITH TIE BARS.

(P) TOP OF PAVEMENT OR CONCRETE BASE.

(R1) ROUND TO 1/4″ RADIUS (EXCEPT FOR SAWED JOINTS).

(R2) ROUND TO 3/4″ RADIUS.

(R3) CONSTRUCT TO 9″ RADIUS.

(1) PAY LIMIT FOR PAVEMENT

(2) PAY LIMIT FOR CURB, OR CURB & GUTTER.

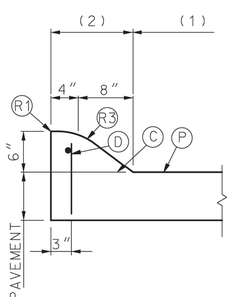

TYPE M
(INTEGRAL)

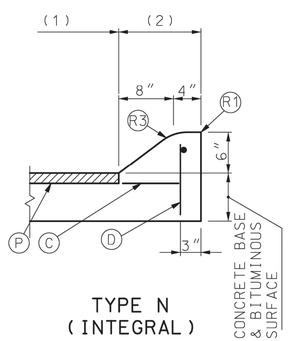

TYPE N
(INTEGRAL)

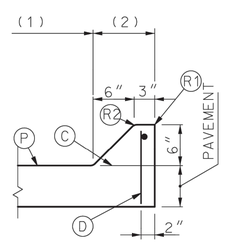

TYPE O
(INTEGRAL)

MOUNTABLE CURBS

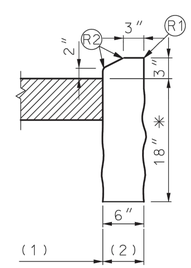

TYPE F
(SEPARATED)

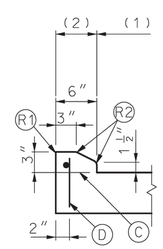

TYPE E
(INTEGRAL)

BEGINNING AND ENDING OF INTRODUCED LOW PROFILE CURB SHALL UTILIZE CURB HEIGHT RUNOUT FORM 0 INCHES TO 3 INCHES IN 5 FEET. PAYMENT LENGTH SHALL INCLUDE TAPERS.

✳ DEPTH MAY BE REDUCED IF KEYED 6″ IN ROCK.

LOW PROFILE CURB

MISSOURI HIGHWAYS AND TRANSPORTATION COMMISSION
105 WEST CAPITOL
JEFFERSON CITY, MO 65102
1-888-ASK-MODOT (1-888-275-6636)

STATE OF MISSOURI
KENNETH L VOSS
NUMBER PE-2002016747
PROFESSIONAL ENGINEER
THIS SHEET HAS BEEN SIGNED, SEALED AND DATED ELECTRONICALLY.

CONCRETE CURB, CURB AND GUTTER, AND GUTTER

DATE EFFECTIVE: 1/1/2025	609.00R	SHEET NO.
DATE PREPARED: 10/4/2024		2 OF 2

olsson
7301 West 133rd Street
Suite 200
Overland Park, KS 66213
olsson.com
TEL 913.381.1170
FAX 913.381.1174
Olsson - Engineering
Missouri COA #001592

STATE OF MISSOURI
REO A. BRENNEY
NUMBER PE-2010019516
PROFESSIONAL ENGINEER
07/25/2025

REV. NO.	DATE	DESCRIPTION	BY

REVISIONS

STANDARD DETAILS

US HWY 50 (BROADWAY BLVD.)
PUBLIC IMPROVEMENTS

SEDALIA, MISSOURI

2025

drawn by: DAC
designed by: DAC
project no.: 025-01245
date: 07.25.2025

F:\2025\01001-01500\025-01245\4-Design\AutoCAD\Final Plans\Sheets\DETAILS\T_DTL01_01245.dwg
DATE: Jul 25, 2025 9:14pm USER: dcove

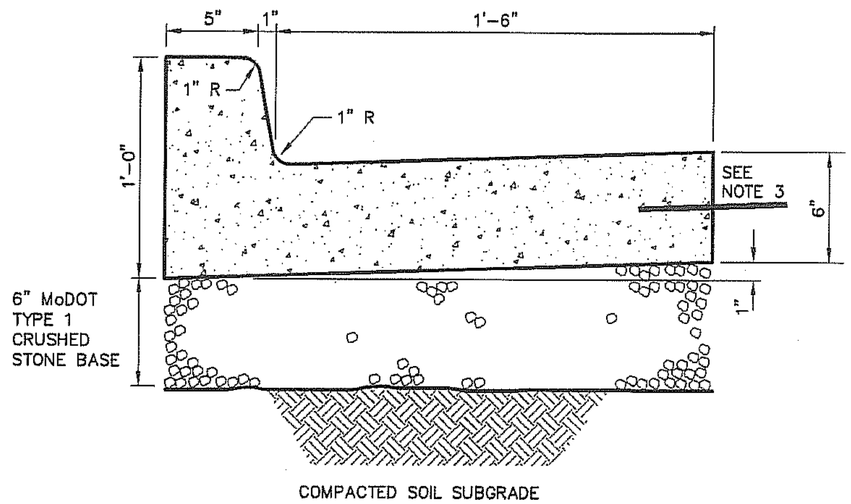

NOTES:

1. CURB & GUTTER SHALL BE PORTLAND CEMENT CONCRETE.
2. EXPANSION JOINTS AND CONTRACTION JOINTS IN CURB & GUTTER SHALL COINCIDE WITH STREET JOINTS IN CONCRETE STREETS AND SHALL BE INSTALLED AT DISTANCES NO GREATER THAN 10' IN CURB & GUTTER ALONG ASPHALT STREETS.
3. WHERE EXISTING PAVEMENT IS CONCRETE, CURB REPLACEMENT SHALL BE DOWELED INTO THE STREET WITH 12" LONG #4 BARS AT 24" CTR.

Approved _____ Date ___/___/___

Revisions

TYPE 1 CURB
(TYPICAL)

2.401

olsson

7301 West 133rd Street
Suite 200
Overland Park, KS 66213

olsson.com
TEL 913.381.1170
FAX 913.381.1174

Olsson - Engineering
Missouri COA #001592

STATE OF MISSOURI
REO A. BRENNEY BATTS
NUMBER PE-2010019516
REGISTERED PROFESSIONAL ENGINEER
07/25/2025

REV. NO.	DATE	DESCRIPTION	BY

REVISIONS

STANDARD DETAILS

US HWY 50 (BROADWAY BLVD.)
PUBLIC IMPROVEMENTS

SEDALIA, MISSOURI

2025

drawn by: DAC
designed by: DAC
project no.: 025-01245
date: 07.25.2025

F:\2025\01001-01500\025-01245\40-Design\AutoCAD\Final Plans\Sheets\DETAILS\T_DTL01_01245.dwg
DATE: Jul 25, 2025 9:14pm USER: dcove

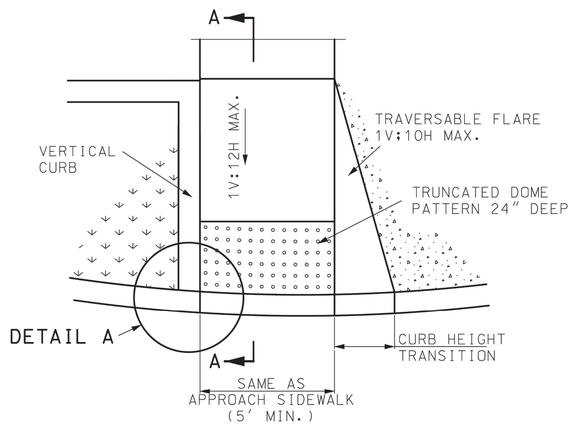

CURB RAMP DETAIL

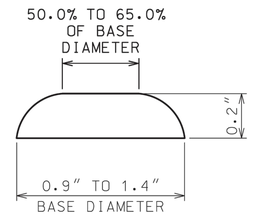

TRUNCATED DOMES
CROSS SECTION

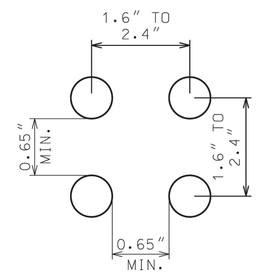

TRUNCATED DOMES
SPACING

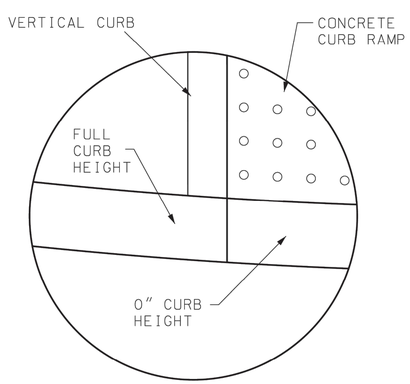

DETAIL A

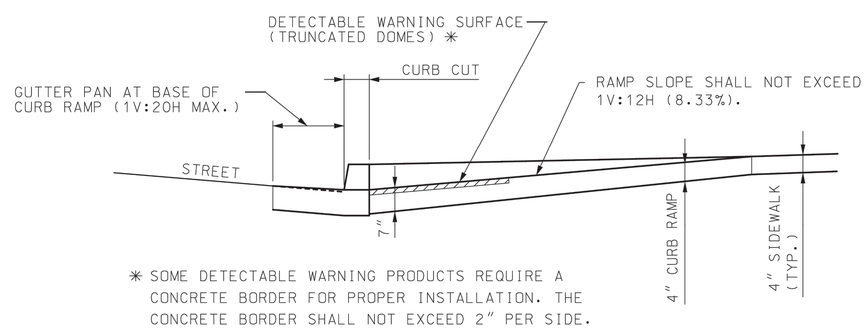

✳ SOME DETECTABLE WARNING PRODUCTS REQUIRE A CONCRETE BORDER FOR PROPER INSTALLATION. THE CONCRETE BORDER SHALL NOT EXCEED 2" PER SIDE.

SECTION A-A

GENERAL NOTES:

ALL AREAS OF THE PEDESTRIAN ACCESS ROUTE MUST BE COMPLIANT WITH THE AMERICANS WITH DISABILITIES ACT - GUIDELINES FOR ACCESSIBLE PUBLIC RIGHTS OF WAY". EXCEPTIONS MUST BE APPROVED BY THE ENGINEER. ALL OTHER AREAS OF NON-COMPLIANCE SHALL BE REMOVED AND CORRECTED AT THE CONTRACTOR'S EXPENSE.

THE SURFACES OF PEDESTRIAN ACCESS ROUTES AND ELEMENTS, AND SPACES REQUIRED TO CONNECT TO PEDESTRIAN ACCESS ROUTES, SHALL BE FIRM, STABLE, SLIP RESISTANT, AND SHALL NOT POND WATER.

SIDEWALK, RAMP AND LANDING CROSS SLOPES SHALL BE 1.00% TO FACILITATE DRAINAGE (2.00% MAX.).

THE CROSS SLOPE OF THE CONTINUOUS PEDESTRIAN ACCESS ROUTE THROUGH ENTRANCES, ALLEYS, AND SIDE ROAD CONNECTIONS WITH STOP OR YIELD CONTROL SHALL BE 1.00% TO FACILITATE DRAINAGE (2.00% MAX.).

WHERE PEDESTRIAN ACCESS ROUTES ARE CONTAINED WITHIN PEDESTRIAN STREET CROSSINGS WITHOUT YIELD OR STOP CONTROL, THE CROSS SLOPE OF THE PEDESTRIAN ACCESS ROUTE SHALL BE 5.00% MAXIMUM.

WHERE PEDESTRIAN ACCESS ROUTES ARE CONTAINED WITHIN MIDBLOCK PEDESTRIAN STREET CROSSINGS, THE CROSS SLOPE OF THE PEDESTRIAN ACCESS ROUTE SHALL BE PERMITTED TO EQUAL THE STREET OR HIGHWAY GRADE.

30"x 48" CLEAR SPACE SHALL BE PROVIDED CENTERED ON THE PEDESTRIAN PUSH BUTTON.

BEYOND THE BOTTOM GRADE BREAK OF A CURB RAMP, A CLEAR SPACE 4'MINIMUM BY 4'MINIMUM SHALL BE PROVIDED WITHIN THE WIDTH OF THE PEDESTRIAN STREET CROSSING AND WHOLLY OUTSIDE THE PARALLEL VEHICLE TRAVEL LANE.

SIDE FLARES OF CURB RAMPS, IN THE PATH OF PEDESTRIAN TRAVEL (TRAVERSABLE), SHALL NOT EXCEED A SLOPE OF 1V:10H. SIDE FLARES OUTSIDE THE PEDESTRIAN PATH (NONTRAVERSABLE) MAY BE VERTICAL.

TRANSITION FROM SIDEWALK OR CURB RAMP TO GUTTER TO ROADWAY SHALL BE FLUSH.

DETECTABLE WARNING SURFACES (TRUNCATED DOMES) SHALL BE PREFORMED AND INSTALLED AS PER MANUFACTURER'S RECOMMENDATIONS. STAMPED CONCRETE WILL NOT BE ACCEPTED.

THE DETECTABLE WARNING SURFACE SHALL CONTRAST VISUALLY WITH ADJOINING SURFACES, EITHER LIGHT-ON-DARK OR DARK-ON-LIGHT. TRUNCATED DOMES SHALL SPAN THE FULL WIDTH OF THE RAMP OR LANDING 24" DEEP.

DETECTABLE WARNING SURFACES SHALL BE ALIGNED PERPENDICULAR OR RADIAL TO THE BREAK BETWEEN THE RAMP, LANDING OR BLENDED TRANSITION, AND THE STREET.

WHERE THE BOTTOM GRADE BREAK OF A CURB RAMP IS LESS THAN 5' FROM THE BACK OF CURB, DETECTABLE WARNINGS SHALL BE LOCATED ON THE RAMP SURFACE AT THE BACK OF THE CURB. WHERE THE GRADE BREAK IS GREATER THAN 5' FROM THE BACK OF CURB, THE DETECTABLE WARNING SHALL BE LOCATED ON THE LOWER LANDING.

MoDOT
MISSOURI HIGHWAYS AND TRANSPORTATION COMMISSION
105 WEST CAPITOL
JEFFERSON CITY, MO 65102
1-888-ASK-MODOT (1-888-275-6636)

STATE OF MISSOURI
TRAVIS D. KOESTNER
NUMBER PE-30042
PROFESSIONAL ENGINEER
THIS SHEET HAS BEEN SIGNED, SEALED AND DATED ELECTRONICALLY.

CURB RAMPS

DATE EFFECTIVE: 01/01/2023
DATE PREPARED: 10/6/2022

608.50A

SHEET NO. 1 of 4

IF A SEAL IS PRESENT ON THIS SHEET IT HAS BEEN ELECTRONICALLY SEALED AND DATED.

olsson
7301 West 133rd Street
Suite 200
Overland Park, KS 66213
olsson.com
TEL 913.381.1170
FAX 913.381.1174
Olsson - Engineering
Missouri COA #001592

STATE OF MISSOURI
REO A. BRENNEY
NUMBER PE-2010019516
PROFESSIONAL ENGINEER
07/25/2025

REV. NO.	DATE	DESCRIPTION	BY

REVISIONS

STANDARD DETAILS

US HWY 50 (BROADWAY BLVD.)
PUBLIC IMPROVEMENTS

SEDALIA, MISSOURI

2025

drawn by: DAC
designed by: DAC
project no.: 025-01245
date: 07.25.2025

SHEET
13 of 33

F:\2025\01001-01500\025-01245\40-Design\AutoCAD\Final Plans\Sheets\DETAILS\T_DTL01_01245.dwg
DATE: Jul 25, 2025 9:14pm USER: dcove

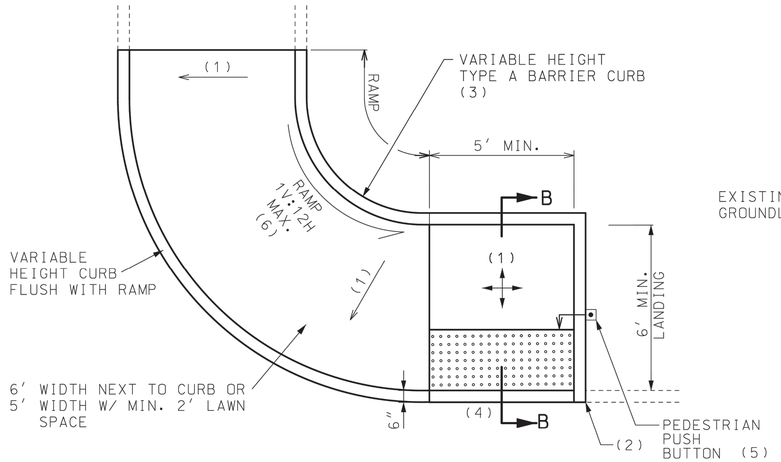

TYPE 1 PARALLEL

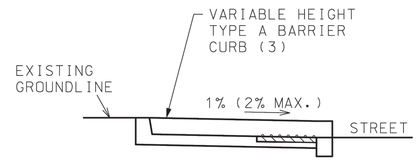

SECTION B-B

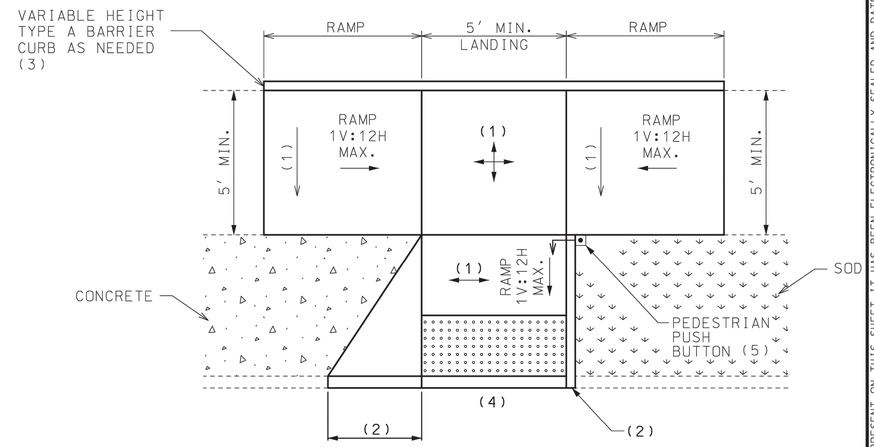

COMPOUND PERPENDICULAR

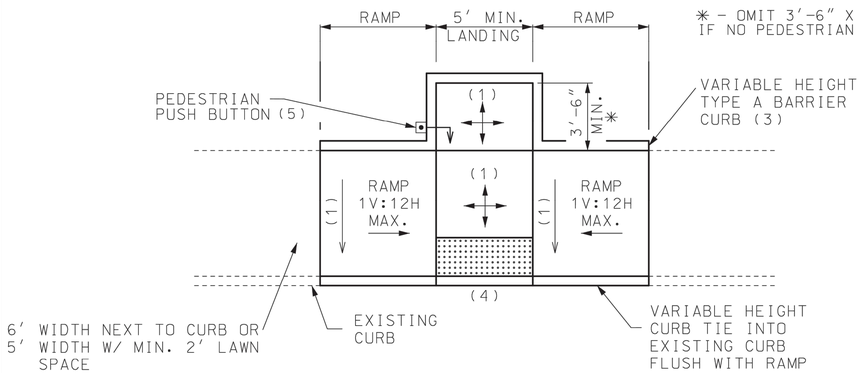

TYPE 2 PARALLEL

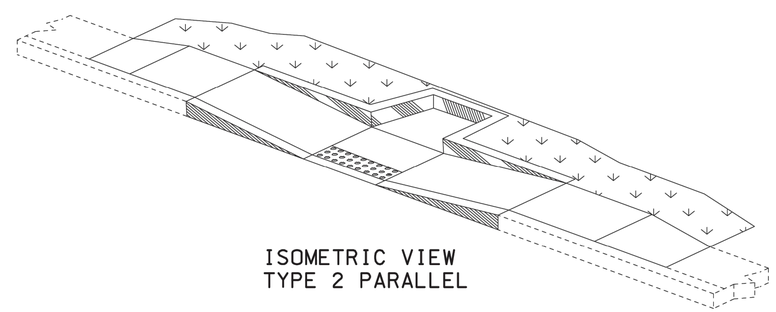

ISOMETRIC VIEW
TYPE 2 PARALLEL

GENERAL NOTES:

(1) 1.0% (2.0% MAX.) CROSS SLOPE OR ROAD GRADE EXCEPTION.
(2) VARIABLE HEIGHT VERTICAL CURB. IF TRAVERSABLE USE A MAXIMUM 1V:10H FLARE MEASURED PARALLEL TO THE CURB LINE.
(3) HEIGHT VARIES TO MEET EXISTING GROUND.
(4) THE COUNTER SLOPE OF THE GUTTER OR STREET AT THE FOOT OF CURB RAMP RUNS, BLENDED TRANSITIONS, AND TURNING SPACES SHALL BE 5% MAXIMUM.
(5) THE FACE OF PEDESTRIAN PUSH BUTTONS SHALL BE OFFSET 0" FOR FRONT APPROACH AND 10" MAX. FOR SIDE APPROACH TO THE CURB FACE.
(6) ENSURE THAT THE INSIDE EDGE OF CURVED RAMPS MAINTAIN AN 8.3% (1V:12H) MAXIMUM SLOPE.

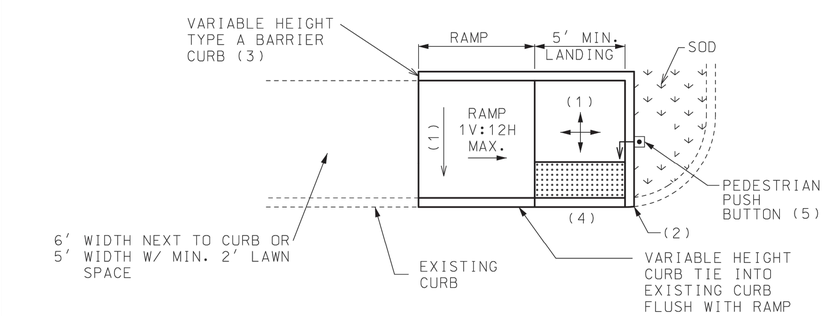

TYPE 3 PARALLEL

MISSOURI HIGHWAYS AND TRANSPORTATION COMMISSION
105 WEST CAPITOL
JEFFERSON CITY, MO 65102
1-888-ASK-MODOT (1-888-275-6636)

STATE OF MISSOURI
TRAVIS D. KOESTNER
NUMBER PE-30042
PROFESSIONAL ENGINEER
THIS SHEET HAS BEEN SIGNED, SEALED AND DATED ELECTRONICALLY.

CURB RAMPS

DATE EFFECTIVE: 01/01/2023
DATE PREPARED: 10/6/2022

608.50A

SHEET NO.
2 of 4

IF A SEAL IS PRESENT ON THIS SHEET IT HAS BEEN ELECTRONICALLY SEALED AND DATED.

olsson
7301 West 133rd Street
Suite 200
Overland Park, KS 66213
olsson.com
TEL 913.381.1170
FAX 913.381.1174
Olsson - Engineering
Missouri COA #001592

STATE OF MISSOURI
REO A. BRENNEY
NUMBER PE-2010019516
PROFESSIONAL ENGINEER
07/25/2025

REV. NO.	DATE	DESCRIPTION	BY

REVISIONS

STANDARD DETAILS

US HWY 50 (BROADWAY BLVD.)
PUBLIC IMPROVEMENTS

SEDALIA, MISSOURI

2025

drawn by: DAC
designed by: DAC
project no.: 025-01245
date: 07.25.2025

F:\2025\01001-01500\025-01245\40-Design\AutoCAD\Final Plans\Sheets\DETAILS\T_DTL01_01245.dwg
DATE: Jul 25, 2025 9:14pm USER: dcove

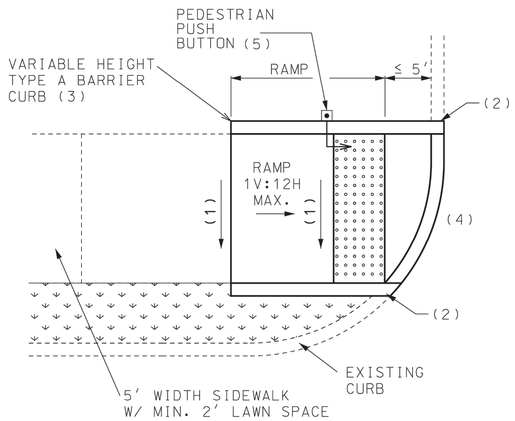

SMALL RADIUS PERPENDICULAR

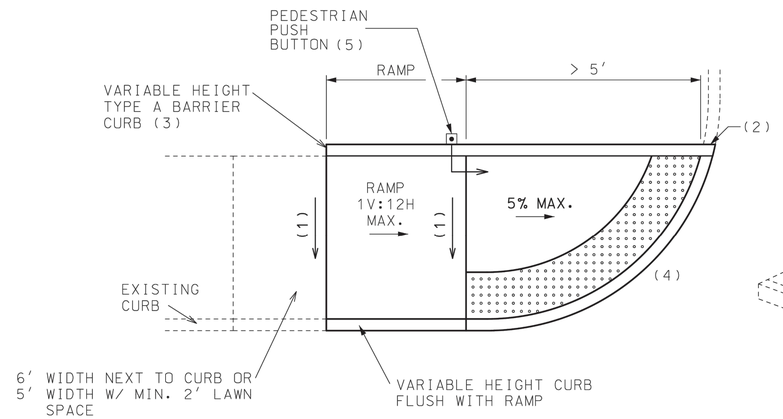

LARGE RADIUS PERPENDICULAR

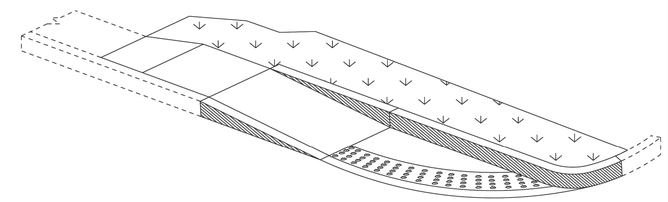

ISOMETRIC VIEW
LARGE RADIUS PERPENDICULAR

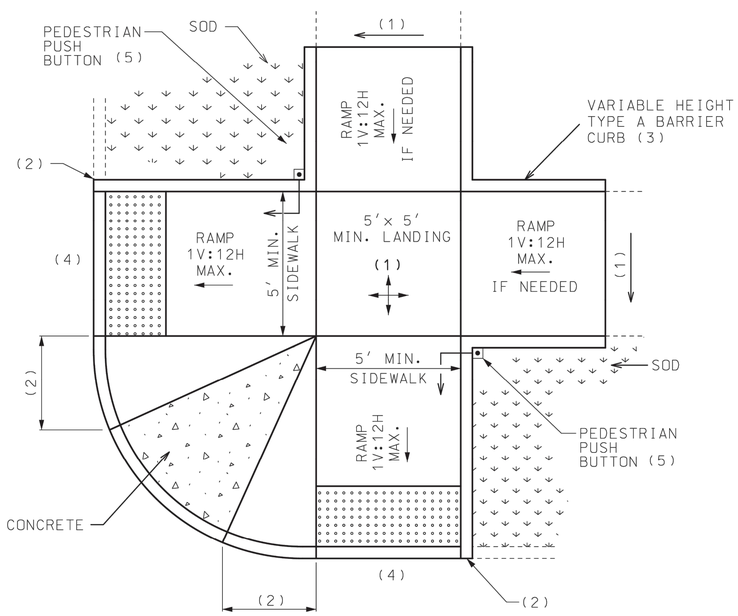

DUAL PERPENDICULAR

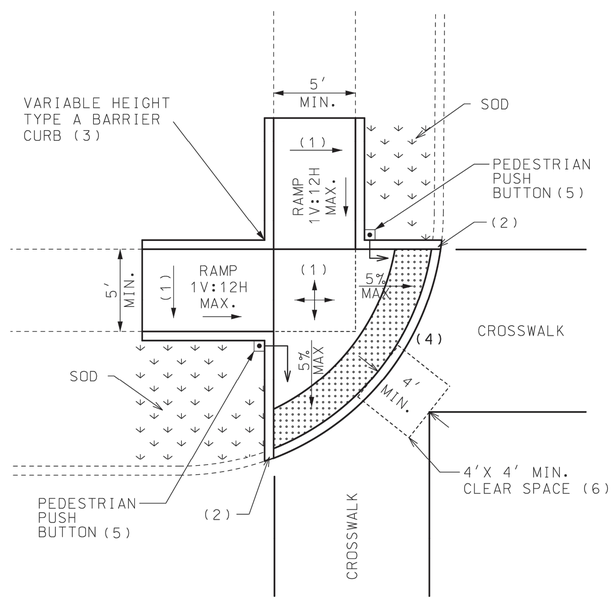

BLENDED TRANSITION

GENERAL NOTES:

(1) 1.0% MINIMUM, 2.0% MAXIMUM CROSS SLOPE.
(2) VARIABLE HEIGHT VERTICAL CURB. IF TRAVERSABLE USE A MAX. 1V:10H FLARE MEASURED PARALLEL TO THE CURB LINE.
(3) HEIGHT VARIES TO MEET EXISTING GROUND.
(4) THE COUNTER SLOPE OF THE GUTTER OR STREET AT THE FOOT OF CURB RAMP RUNS, BLENDED TRANSITIONS, AND TURNING SPACES SHALL BE 5% MAXIMUM.
(5) THE FACE OF PEDESTRIAN PUSH BUTTONS SHALL BE OFFSET 0" FOR FRONT APPROACH AND 10" MAX. FOR SIDE APPROACH TO THE CURB FACE.
(6) BEYOND THE BOTTOM GRADE BREAK, A CLEAR SPACE 4'X 4' MINIMUM SHALL BE PROVIDED WITHIN THE WIDTH OF THE PEDESTRIAN STREET CROSSING AND WHOLLY OUTSIDE THE PARALLEL VEHICLE TRAVEL LANE.

MISSOURI HIGHWAYS AND TRANSPORTATION COMMISSION
105 WEST CAPITOL
JEFFERSON CITY, MO 65102
1-888-ASK-MODOT (1-888-275-6636)

STATE OF MISSOURI
TRAVIS D. KOESTNER
NUMBER PE-30042
PROFESSIONAL ENGINEER
THIS SHEET HAS BEEN SIGNED, SEALED AND DATED ELECTRONICALLY.

CURB RAMPS

DATE EFFECTIVE: 01/01/2023
DATE PREPARED: 10/6/2022

608.50A

SHEET NO. 3 of 4

IF A SEAL IS PRESENT ON THIS SHEET IT HAS BEEN ELECTRONICALLY SEALED AND DATED.

olsson
7301 West 133rd Street
Suite 200
Overland Park, KS 66213
olsson.com
TEL 913.381.1170
FAX 913.381.1174
Olsson - Engineering
Missouri COA #001592

STATE OF MISSOURI
REO A. BRENNEY
NUMBER PE-2010019516
PROFESSIONAL ENGINEER
07/25/2025

REV. NO.	DATE	DESCRIPTION	BY

REVISIONS

STANDARD DETAILS

US HWY 50 (BROADWAY BLVD.) PUBLIC IMPROVEMENTS

SEDALIA, MISSOURI

2025

drawn by: DAC
designed by: DAC
project no.: 025-01245
date: 07.25.2025

F:\2025\01001-01500\025-01245\4D-Design\AutoCAD\Final Plans\Sheets\DETAILS\T_DTL01_01245.dwg
DATE: Jul 25, 2025 9:14pm USER: dcove

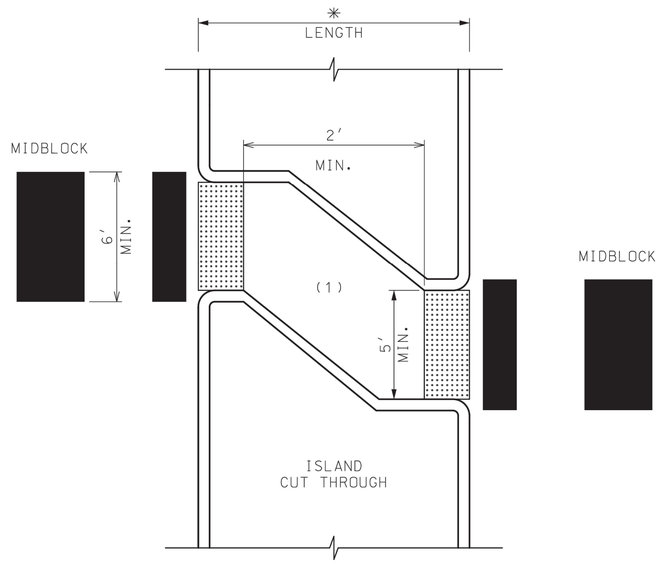

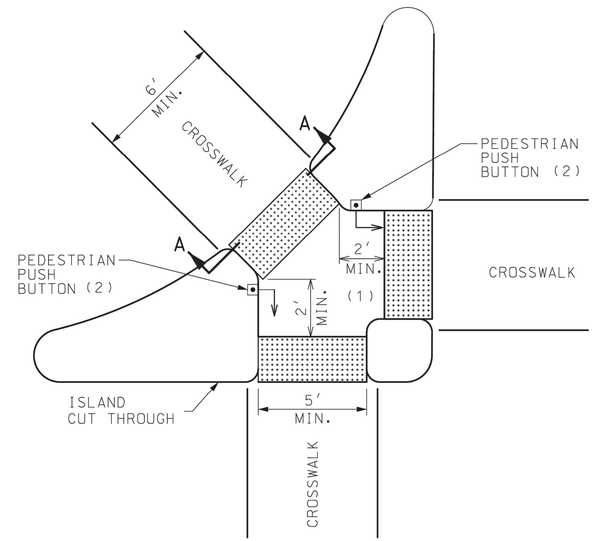

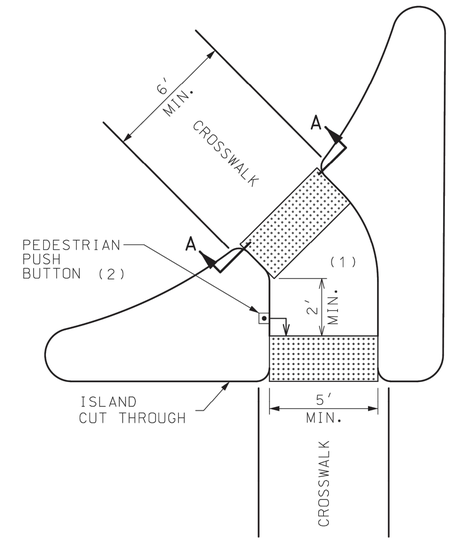

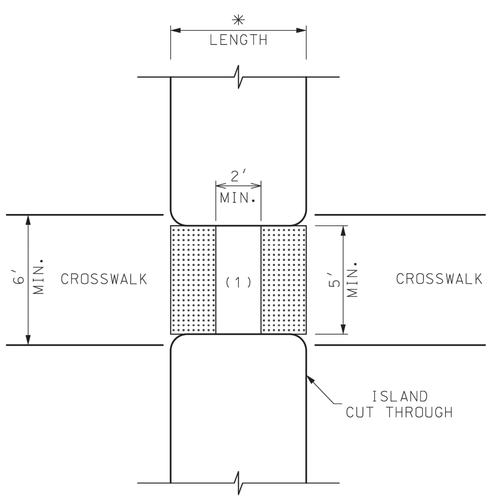

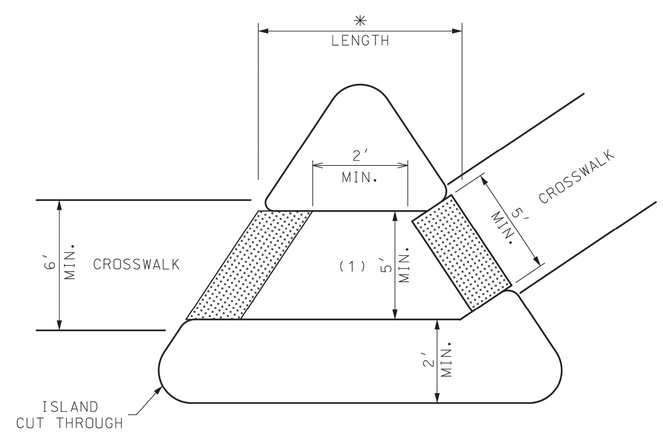

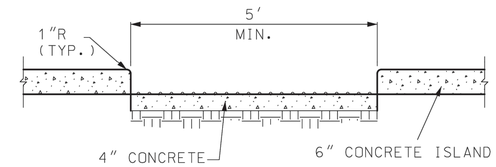

SECTION A–A
ISLAND CUT THROUGH TYPICAL

RAMP OR CUT–THROUGH DEPENDING ON ISLAND WIDTH. IF RAMPED, PROVIDE 4′ MINIMUM LANDING AND SLOPE RAMPS AT 1V:12H MAX.

RAMP MUST BE CONSTRUCTED TO DRAIN TO THE OUTSIDE.

ISLAND CUT THROUGHS

(1) DETECTABLE WARNING SURFACES SHALL BE PLACED AT THE EDGES OF THE PEDESTRIAN ISLAND AND SHALL BE SEPARATED BY 2′ MIN. LENGTH OF SURFACE WITHOUT DETECTABLE WARNINGS.
(2) PEDESTRIAN PUSH BUTTONS SHALL BE OFFSET 0″ FOR FRONT APPROACH AND 10″ MAX. FOR SIDE APPROACH TO THE CURB FACE.

✳ DETECTABLE WARNING SURFACES SHALL BE OMITTED IF LENGTH IS < 6′, BECAUSE REFUGE SPACE IS DEEMED TOO SMALL.

MISSOURI HIGHWAYS AND TRANSPORTATION COMMISSION
105 WEST CAPITOL
JEFFERSON CITY, MO 65102
1–888–ASK–MODOT (1–888–275–6636)

STATE OF MISSOURI
TRAVIS D. KOESTNER
NUMBER PE-30042
PROFESSIONAL ENGINEER
THIS SHEET HAS BEEN SIGNED, SEALED AND DATED ELECTRONICALLY.

CURB RAMPS

DATE EFFECTIVE: 01/01/2023
DATE PREPARED: 10/6/2022

608.50A

SHEET NO.
4 of 4

IF A SEAL IS PRESENT ON THIS SHEET IT HAS BEEN ELECTRONICALLY SEALED AND DATED.

olsson
7301 West 133rd Street
Suite 200
Overland Park, KS 66213
olsson.com
TEL 913.381.1170
FAX 913.381.1174
Olsson - Engineering
Missouri COA #001592

STATE OF MISSOURI
REO BRENNEY BATT
NUMBER PE-2010019516
PROFESSIONAL ENGINEER
07/25/2025

REV. NO.	DATE	DESCRIPTION	BY

REVISIONS

STANDARD DETAILS

US HWY 50 (BROADWAY BLVD.)
PUBLIC IMPROVEMENTS

SEDALIA, MISSOURI

2025

drawn by: DAC
designed by: DAC
project no.: 025-01245
date: 07.25.2025

SHEET
16 of 33

F:\2025\01001-01500\025-01245\40-Design\AutoCAD\Final Plans\Sheets\DETAILS\T_DTL01_01245.dwg
DATE: Jul 25, 2025 9:14pm USER: dcove

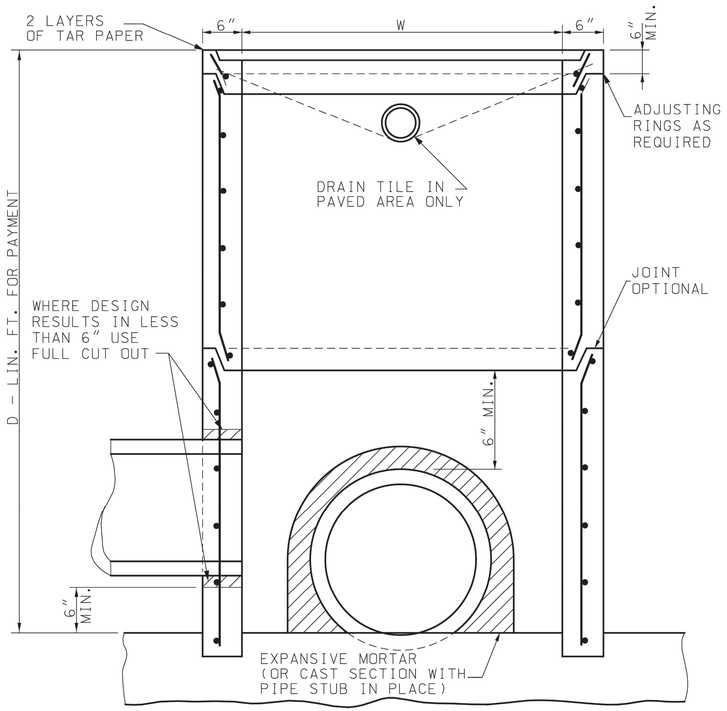

SECTION A–A

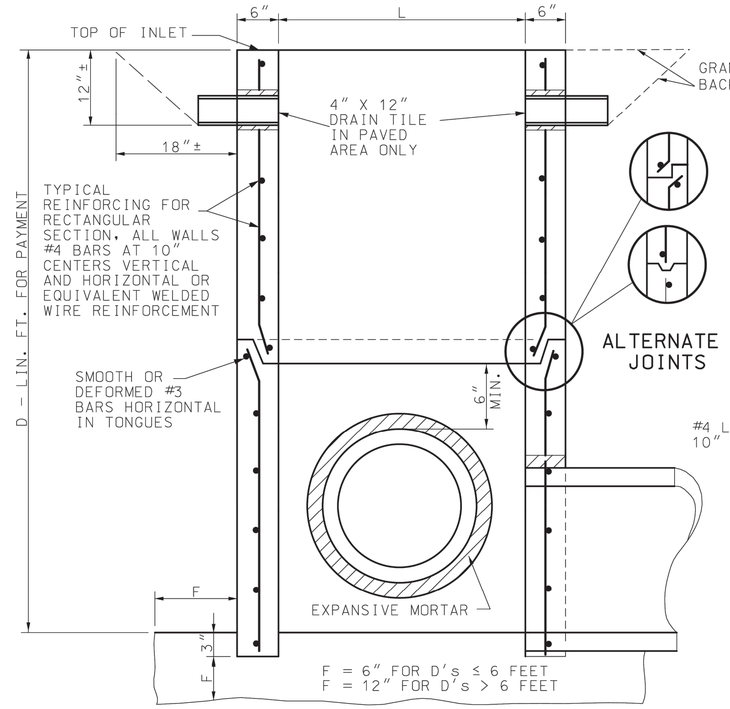

SECTION B–B

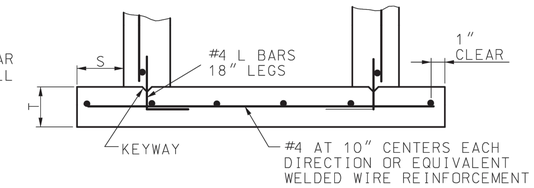

SECTION C–C

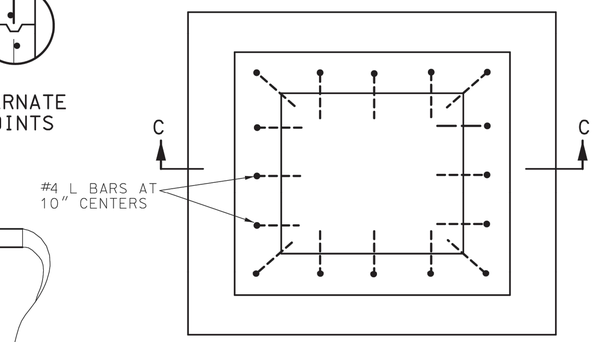

S = 0 FOR D ≤ 6 FEET AND 9″ FOR D > 6 FEET

T = 6″ FOR D ≤ 6 FEET AND 9″ FOR D > 6 FEET

FOUNDATION SLAB AND BASE SECTION MAY BE POURED MONOLITHIC OR SEPARATELY WITH A KEYWAY.

PRECAST FOUNDATION SLAB

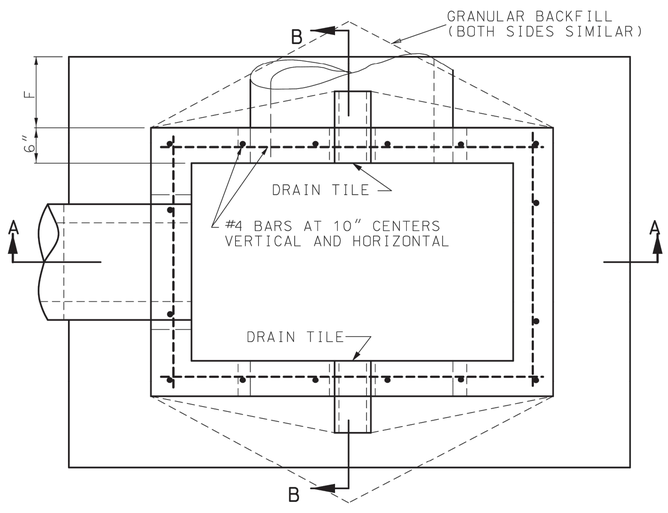

INLET PLAN

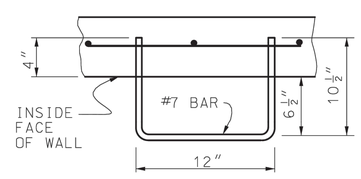

STEPS

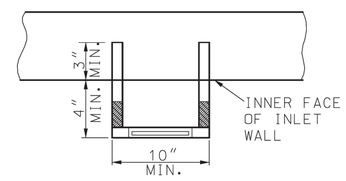

STEP INSTALLATION (OTHER THAN STEEL BAR)

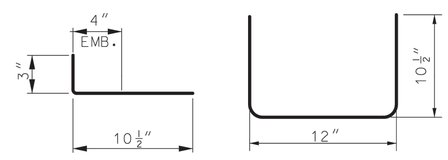

S – BARS

BENDING DIAGRAM STEEL STEP BAR

GENERAL NOTES:

STEPS SHALL BE PLACED AT VERTICAL INTERVALS OF 16″ MAXIMUM IN ALL INLETS HAVING A DEPTH OF MORE THAN 4 FEET. STEPS SHALL BEGIN AT AN ELEVATION 6″ ABOVE THE TOP OF THE OUTLET PIPE.

STEPS SHALL BE SET LEVEL AND IN VERTICAL ALIGNMENT AND NOT NEARER THAT 3″ TO A JOINT.

NO DIRECT PAYMENT WILL BE MADE FOR INLET STEPS.

STEPS ARE NOT REQUIRED FOR TYPE D INLETS.

MISSOURI HIGHWAYS AND TRANSPORTATION COMMISSION
105 WEST CAPITOL
JEFFERSON CITY, MO 65102
1-888-ASK-MODOT (1-888-275-6636)

STATE OF MISSOURI
KENNETH L VOSS
NUMBER PE-2002016747
PROFESSIONAL ENGINEER
THIS SHEET HAS BEEN SIGNED, SEALED AND DATED ELECTRONICALLY.

PRECAST DROP INLET

DATE EFFECTIVE: 1/1/2025
DATE PREPARED: 10/4/2024

731.10T

SHEET NO. 1 OF 8

olsson
7301 West 133rd Street
Suite 200
Overland Park, KS 66213
olsson.com
TEL 913.381.1170
FAX 913.381.1174
Olsson - Engineering
Missouri COA #001592

STATE OF MISSOURI
REO A. BRENNEY
NUMBER PE-2010019516
PROFESSIONAL ENGINEER
07/25/2025

REV. NO.	DATE	DESCRIPTION	BY

REVISIONS

STANDARD DETAILS

US HWY 50 (BROADWAY BLVD.) PUBLIC IMPROVEMENTS

SEDALIA, MISSOURI

2025

drawn by: DAC
designed by: DAC
project no.: 025-01245
date: 07.25.2025

F:\2025\01001-01500\025-01245\40-Design\AutoCAD\Final Plans\Sheets\DETAILS\T_DTL01_01245.dwg
DATE: Jul 25, 2025 9:14pm USER: ddove

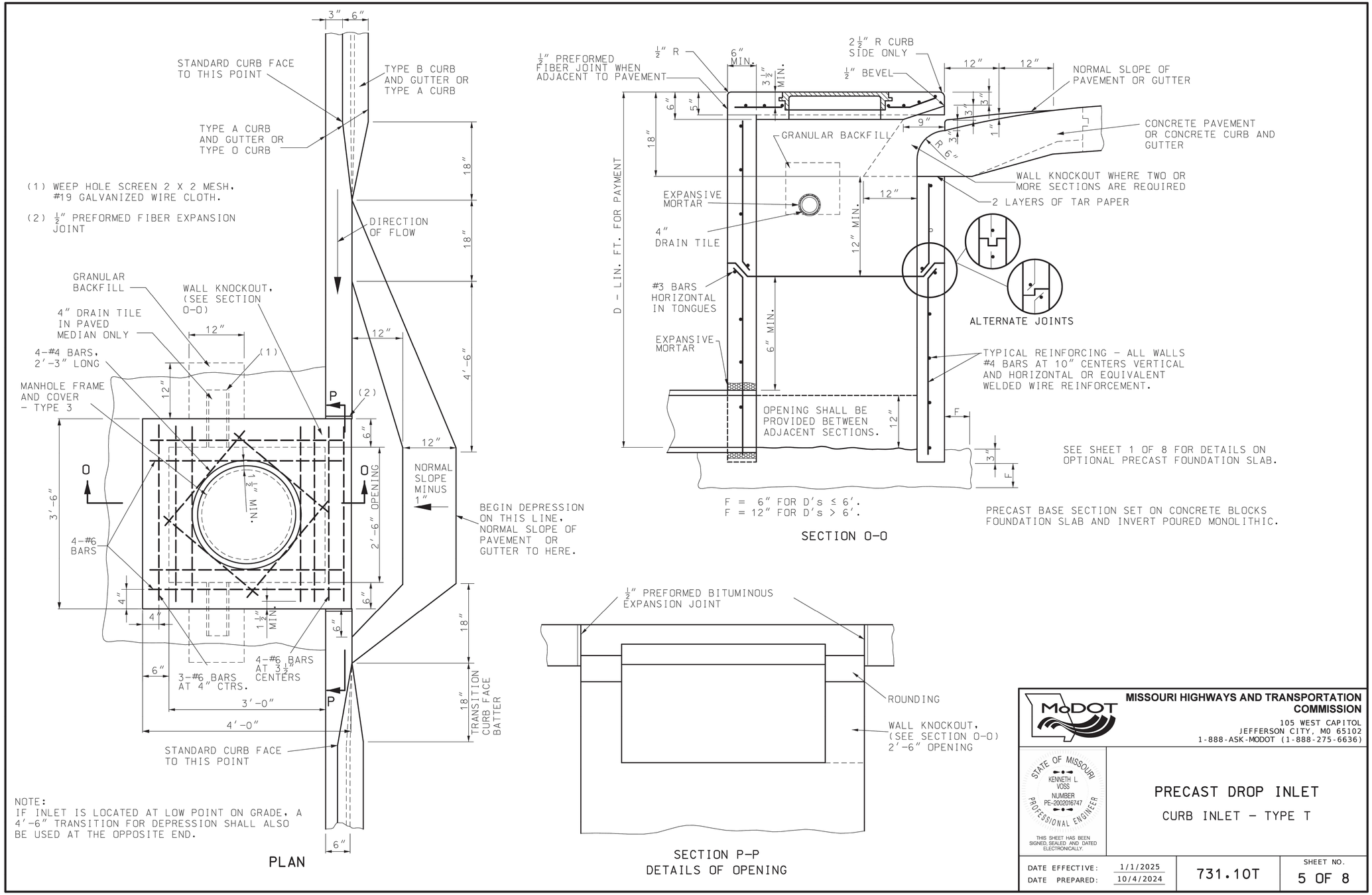

MISSOURI HIGHWAYS AND TRANSPORTATION COMMISSION
105 WEST CAPITOL
JEFFERSON CITY, MO 65102
1-888-ASK-MODOT (1-888-275-6636)

STATE OF MISSOURI
KENNETH L VOSS
NUMBER PE-2002016747
PROFESSIONAL ENGINEER
THIS SHEET HAS BEEN SIGNED, SEALED AND DATED ELECTRONICALLY.

PRECAST DROP INLET

CURB INLET - TYPE T

DATE EFFECTIVE: 1/1/2025 DATE PREPARED: 10/4/2024	731.10T	SHEET NO. 5 OF 8

olsson
7301 West 133rd Street
Suite 200
Overland Park, KS 66213
olsson.com
TEL 913.381.1170
FAX 913.381.1174
Olsson - Engineering
Missouri COA #001592

STATE OF MISSOURI
REO A. BRENNEY
NUMBER PE-2010019516
PROFESSIONAL ENGINEER
07/25/2025

REV. NO.	DATE	DESCRIPTION	BY

REVISIONS

STANDARD DETAILS

US HWY 50 (BROADWAY BLVD.) PUBLIC IMPROVEMENTS

SEDALIA, MISSOURI

2025

drawn by: DAC
designed by: DAC
project no.: 025-01245
date: 07.25.2025

F:\2025\01001-01500\025-01245\40-Design\AutoCAD\Final Plans\Sheets\DETAILS\T_DTL01_01245.dwg
DATE: Jul 25, 2025 9:14pm USER: dcove

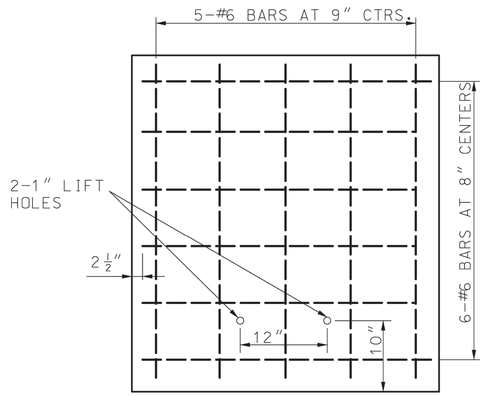

NOTE: REINFORCING FOR LIDS ON UPSTREAM SECTIONS.

LID FOR ADJACENT SECTIONS

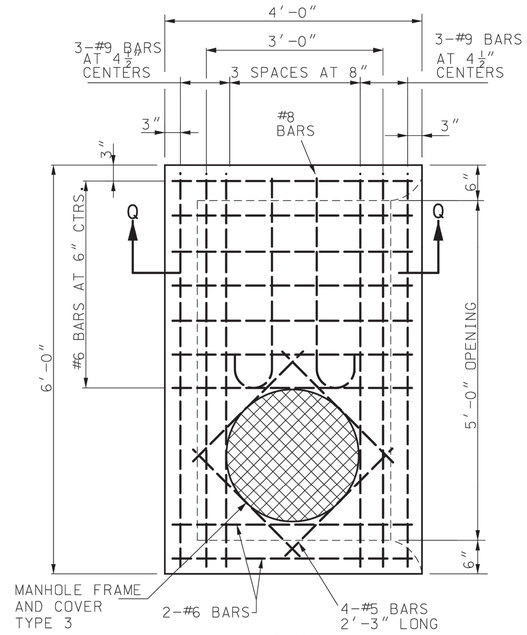

PLAN

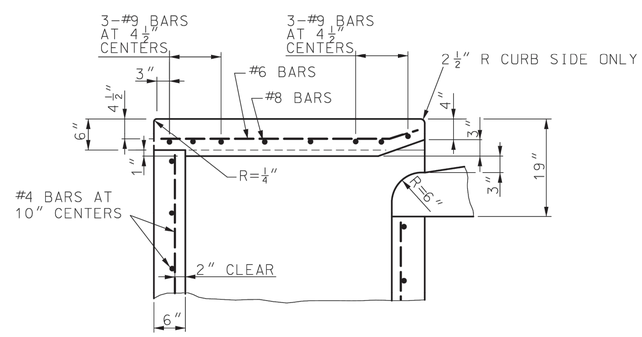

SECTION Q-Q

OPTIONAL PRECAST CURB INLET

5'-0" OPENING

OTHER DETAILS ARE SAME AS FOR THE 2'-6" OPENING DROP INLET THIS SHEET.

GENERAL NOTES:

NOTES PERTAINING TO TYPE T:

THE LENGTH AND DEPTH OF THE INLET SHALL BE AS SHOWN ON THE PLANS.

WALLS BETWEEN THE ADJACENT SECTIONS SHALL BE SEALED IN ACCORDANCE WITH SECTION 726.3.1 OF THE STANDARD SPECIFICATIONS.

IF DEPTH OF INLET EXCEEDS 6 FEET THE PRECAST UNITS MAY BE FURNISHED IN TWO OR MORE SECTIONS.

IF TWO OR MORE SECTIONS ARE USED, THE TYPE 3 MANHOLE FRAME AND COVER SHALL BE IN THE DOWNSTREAM SECTION ONLY.

IF A 5 FOOT OPENING IS REQUIRED, TWO 2'-6" OPENING SECTIONS OR ONE 5 FOOT OPENING SECTION MAY BE PROVIDED AT THE CONTRACTOR'S OPTION.

SEE SHEET 1 FOR STEP DETAILS AND SHEET 4 FOR GENERAL NOTES.

MISSOURI HIGHWAYS AND TRANSPORTATION COMMISSION
105 WEST CAPITOL
JEFFERSON CITY, MO 65102
1-888-ASK-MODOT (1-888-275-6636)

STATE OF MISSOURI
KENNETH L VOSS
NUMBER PE-2002016747
PROFESSIONAL ENGINEER
THIS SHEET HAS BEEN SIGNED, SEALED AND DATED ELECTRONICALLY.

PRECAST DROP INLET

CURB INLET – TYPE T

DATE EFFECTIVE: 1/1/2025
DATE PREPARED: 10/4/2024

731.10T

SHEET NO. 6 OF 8

olsson
7301 West 133rd Street
Suite 200
Overland Park, KS 66213
olsson.com
TEL 913.381.1170
FAX 913.381.1174
Olsson - Engineering
Missouri COA #001592

STATE OF MISSOURI
REO A. BRENNEY
NUMBER PE-2010019516
PROFESSIONAL ENGINEER
07/25/2025

REV. NO.	DATE	DESCRIPTION	BY

REVISIONS

STANDARD DETAILS

US HWY 50 (BROADWAY BLVD.) PUBLIC IMPROVEMENTS

SEDALIA, MISSOURI

2025

drawn by: DAC
designed by: DAC
project no.: 025-01245
date: 07.25.2025

F:\2025\01001-01500\025-01245\40-Design\AutoCAD\Final Plans\Sheets\DETAILS\T_DTL01_01245.dwg
DATE: Jul 25, 2025 9:14pm USER: ddove

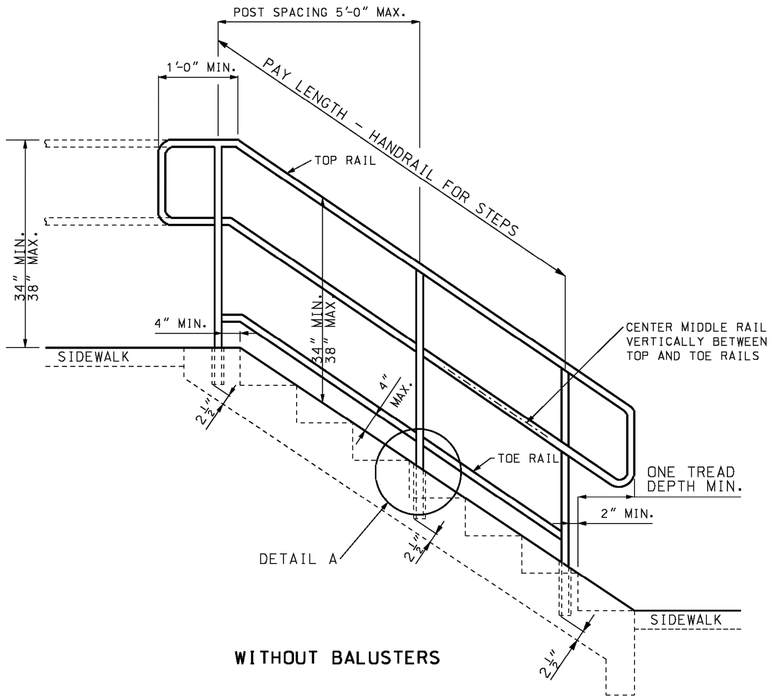

WITHOUT BALUSTERS

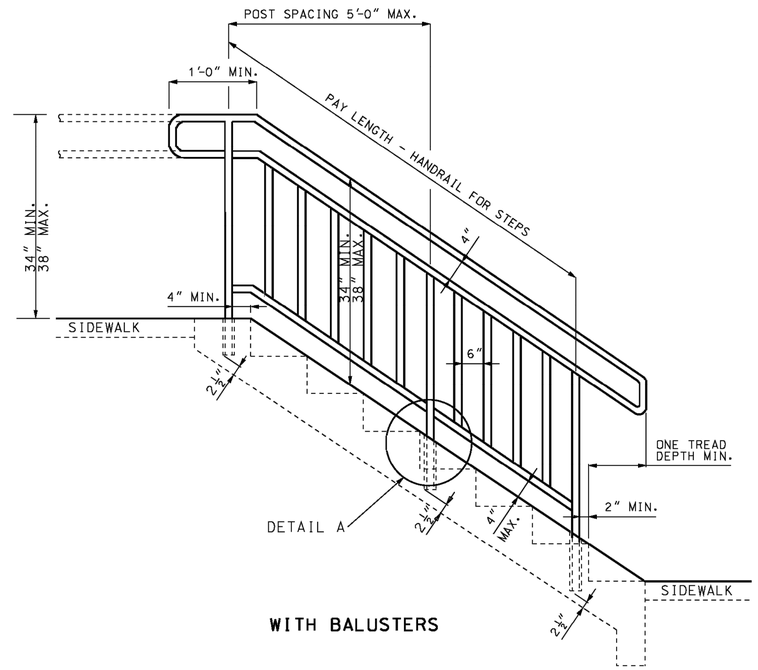

WITH BALUSTERS

RAILING & POST SPECIFICATIONS			
TYPE	SIZE (DIA.)	WEIGHT (LBS./FT.)	
		ALUM.	STEEL
ROUND	1 1/2"	0.940	2.72
SQUARE	2" X 2"	1.3094	4.31

STEP DIMENSIONS				
SLOPE	TREAD	RISE	X	Y
1:1.5	10 1/2"	7"	10 3/16"	5 1/4"
1:2	12"	6"	10 3/8"	5 9/16"
1:3	14 1/4"	4 3/4"	9 1/2"	5 1/4"

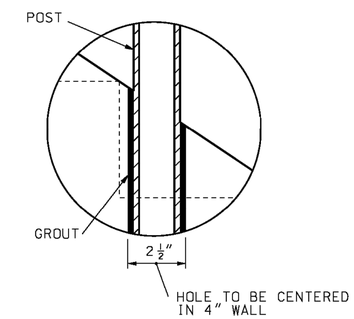

DETAIL A

SAFETY RAIL DETAILS

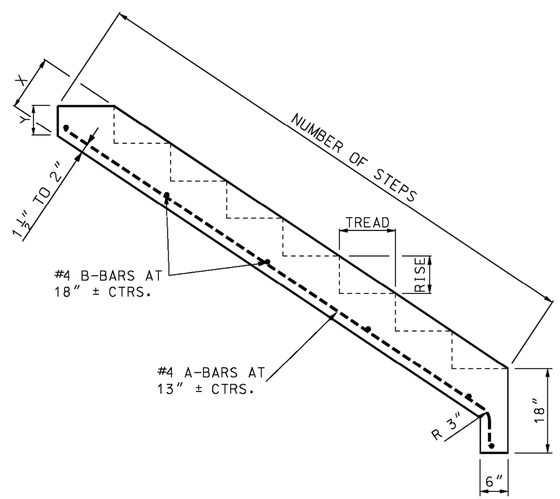

SIDE ELEVATION

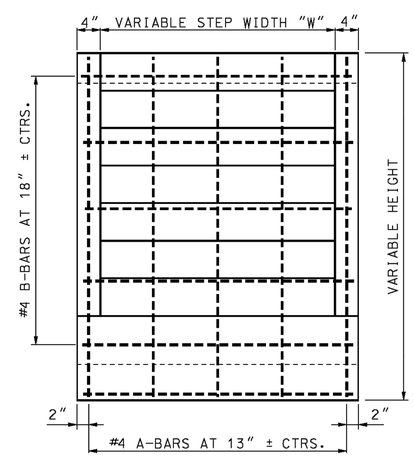

FRONT ELEVATION

STAIRWAY STEP DETAILS

GENERAL NOTES:

STAIRWAY SHALL HAVE SAFETY RAILS AT BOTH SIDES OF ALL STEPS.

RAILINGS AND POSTS MAY BE EITHER ROUND OR SQUARE STEEL OF GOOD COMMERCIAL WELDABLE QUALITY OR ALUMINUM ALLOY 6061-T6 OR 6063-T6.

STEEL RAILINGS AND POSTS SHALL BE GALVANIZED AFTER FABRICATION IN ACCORDANCE WITH AASHTO M111.

ALL JOINTS SHALL BE CONTINUOUS WELDED AND GROUND SMOOTH.

ALL RAILING SHALL HAVE A 1/4" WEEP HOLE NEAR ALL INTERSECTING RAILING CONNECTIONS.

MISSOURI HIGHWAYS AND TRANSPORTATION COMMISSION
105 WEST CAPITOL
JEFFERSON CITY, MO 65102
1-888-ASK-MODOT (1-888-275-6636)

STATE OF MISSOURI
ERIC E. SCHROETER
NUMBER PE-28411
PROFESSIONAL ENGINEER
THIS SHEET HAS BEEN SIGNED, SEALED AND DATED ELECTRONICALLY.

CONCRETE STAIRS

DATE EFFECTIVE: 04/01/2015
DATE PREPARED: 2/20/2015

608.20E

SHEET NO. 1 OF 2

IF A SEAL IS PRESENT ON THIS SHEET IT HAS BEEN ELECTRONICALLY SEALED AND DATED.

olsson

7301 West 133rd Street
Suite 200
Overland Park, KS 66213
olsson.com
TEL 913.381.1170
FAX 913.381.1174
Olsson - Engineering
Missouri COA #001592

STATE OF MISSOURI
REO A. BRENNEY
NUMBER PE-2010019516
PROFESSIONAL ENGINEER
07/25/2025

REV. NO.	DATE	DESCRIPTION	BY

REVISIONS

STANDARD DETAILS

US HWY 50 (BROADWAY BLVD.) PUBLIC IMPROVEMENTS

SEDALIA, MISSOURI

2025

drawn by: DAC
designed by: DAC
project no.: 025-01245
date: 07.25.2025

SHEET 20 of 33

F:\2025\0100\01-01500\025-01245\40-Design\AutoCAD\Final Plans\Sheets\DETAILS\T_DTL01_01245.dwg
DATE: Jul 25, 2025 9:14pm USER: dcove

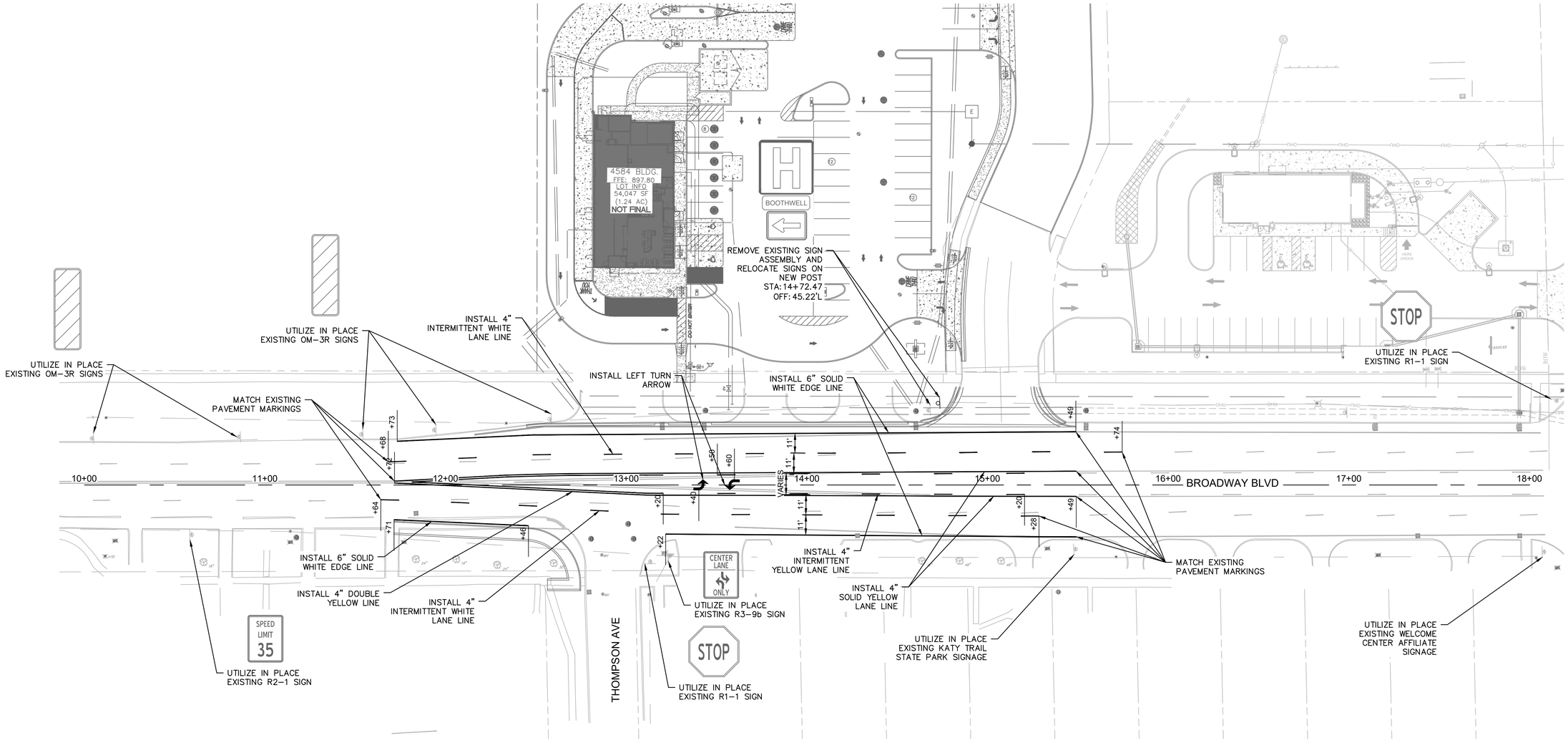

GENERAL NOTES:

1. SEE STANDARD PLAN 620.00 FOR PAVEMENT MARKING DETAILS.
2. CONTRACTOR TO OBLITERATE CONFLICTING PAVEMENT MARKINGS.
3. INTERMITTENT WHITE AND YELLOW MARKINGS ARE 10' LONG WITH 30' SKIPS.

0' 15' 30' 60'
SCALE IN FEET

olsson
7301 West 133rd Street
Suite 200
Overland Park, KS 66213
olsson.com
TEL 913.381.1170
FAX 913.381.1174
Olsson - Engineering
Missouri COA #001592

STATE OF MISSOURI
JEREMY SCOTT STEETZ
NUMBER PE-2017023856
PROFESSIONAL ENGINEER
7/25/2025

REV. NO.	DATE	DESCRIPTION	BY

REVISIONS

PAVEMENT MARKING AND SIGNING PLAN

US HWY 50 (BROADWAY BLVD) PUBLIC IMPROVEMENTS

2025

SEDALIA, MO

drawn by: SEL
designed by: JMP
project no.: 025-01245
date: 07/25/2025

SHEET
21 of 33

F:\2025\01001-01500\025-01245\40-Design\AutoCAD\Final Plans\Sheets\TFT\PAVEMENT MARKING AND SIGNINGIF_SAS_02501245.dwg
DATE: Jul 25, 2025 10:13am USER: jsfretz

SIGNS						CONCRETE FOOTINGS EMBEDDED	STRUCTURAL STEEL POSTS*						PIPE POSTS*					BACKING BARS**				U-CHANNEL POST	PERFORATED SQUARE STEEL TUBE POST													REMARKS AND OTHER REQUIRED ITEMS.
																							2-INCH POST						2.5-INCH POST							
																										ANCHORS						ANCHORS				
SIGN NO.	SIGN SIZE	STATION OR LOG MILE	HORIZ CLEAR IF NOT STD	LOCATION	SIGN DTL. SHT. NO.	ITEM NO. 9031010	POST DES NO.	POST NO. 1	POST NO. 2	POST NO. 3	LBS PER FT	TOTAL ITEM NO. 9031210	PIPE SIZE	POST NO. 1	POST NO. 2	LBS PER FT	TOTAL ITEM NO. 9031220	2" X 3/8" BARS AT 2.55 LBS/FT				ITEM NO. 9031250A	POST NO. 1	POST NO. 2	TOTAL ITEM NO. 9031270A	DRIVEN 12 GA. ITEM NO. 9031271A	DRIVEN 7 GA. ITEM NO. 9031273A	CONCRETE 7 GA. ITEM NO. 9031274	POST NO. 1	POST NO. 2	TOTAL ITEM NO. 9031280	2.25" INSERT (6 FT) ITEM NO. 9031272A	DRIVEN 7 GA. ITEM NO. 9031281A	CONCRETE 7 GA. ITEM NO. 9031285	BREAKWAY ASSEMBLY ITEM NO. 9031241	
																		NO. EACH	LGTH IN.	TOTAL LF	TOTAL LBS															
						CY		LF	LF	LF		LBS	IN.	LF	LF		LBS		IN.	LF	LBS	LF	LF	LF	LF	EA	EA	EA	LF	LF	LF	EA	EA	EA	EACH	
1	EXST SIGN ASSEMBLY	14+75	32' LT.	BROADWAY BLVD																			16			1										MOUNT EXISTING SIGNS ON NEW POST
2																																					
3																																					
4																																					
				SUBTOTAL													0.00									1										
				TOTAL													0.00				**					1										

*BREAKAWAY ASSEMBLY IS INCIDENTAL FOR STRUCTURAL STEEL AND PIPE POSTS

**BACKING BARS ARE TOTALED WITH STRUCTURAL STEEL OF PIPE POSTS

PAVEMENT MARKING

STA.	STA.	LOCATION	HIGH BUILD WATERBORNE PAINT				PREFORMED THERMOPLASTIC	REMARKS
			4" BROKEN LANE LINE YELLOW (L.F.)	4" SOLID LANE LINE YELLOW (L.F.)	6" SOLID EDGE LINE WHITE (L.F.)	4" BROKEN LANE LINE WHITE (L.F.)	LEFT-TURN ARROW WHITE (EACH)	
11+68	15+74	BROADWAY BLVD				406		
11+72	13+21	BROADWAY BLVD		149				
11+72	13+21	BROADWAY BLVD		149				
11+72	15+50	BROADWAY BLVD		378				
11+72	15+50	BROADWAY BLVD		378				
11+73	15+49	BROADWAY BLVD			376			
13+55	15+25	BROADWAY BLVD	170					
13+55	15+25	BROADWAY BLVD	170					
11+64	15+28	BROADWAY BLVD				364		
11+72	12+47	BROADWAY BLVD			75			
13+20	15+48	BROADWAY BLVD			228			
13+46		BROADWAY BLVD					1	
13+64		BROADWAY BLVD					1	
		Subtotal:	**340**	**1054**	**679**	**770**	**2**	
		Multipier:	1.00	1.00	1.00	0.25	1.00	
		TOTAL:	**340**	**1054**	**679**	**193**	**2**	

Pay Item	Item Description	Quantity
6206000D	4" White	193
6205901B	4" Yellow	1394
6205902B	6" Solid White	679
6200021	Left/Right Arrow	2

olsson
7301 West 133rd Street
Suite 200
Overland Park, KS 66213
olsson.com
TEL 913.381.1170
FAX 913.381.1174
Olsson - Engineering
Missouri COA #001592

STATE OF MISSOURI
JEREMY SCOTT STEETZ
NUMBER PE-2017023856
PROFESSIONAL ENGINEER
7/25/2025

REV. NO.	DATE	DESCRIPTION	BY

REVISIONS

PAVEMENT MARKING AND SIGNING PLAN

US HWY 50 (BROADWAY BLVD) PUBLIC IMPROVEMENTS

SEDALIA, MO

2025

drawn by: SEL
designed by: JMP
project no.: 025-01245
date: 07/25/2025

F:\2025\01001-01500\025-01245\40-Design\AutoCAD\Final Plans\Sheets\TFT\PAVEMENT MARKING AND SIGNINGIF_SAS_02501245.dwg
DATE: Jul 25, 2025 10:13am USER: jsteetz

LEGEND

- Phase 1 Work Area
- Phase 2 Work Area
- Phase 3 Work Area

CONSTRUCTION SEQUENCE:

PHASE 1.) PARTIAL CLOSURE OF SOUTHBOUND LANE ALONG HANCOCK AVENUE. REMAINING PORTION OF UTILITY CONNECTION TO BE CONSTRUCTED DURING THIS PHASE. ACCESSES TO BE MAINTAINED FOR EXISTING TACO BELL SITE. VEHICULAR DETOUR TO BE PROVIDED ALONG MARVIN AVENUE. CONTRACTOR TO MAINTAIN SIDEWALK ACCESS THROUGH CONSTRUCTION PHASE FOR PEDESTRIANS.

PHASE 2.) CLOSURE OF NORTHERNMOST WESTBOUND LANE ALONG BROADWAY BLVD. REMAINING UTILITY CONNECTION AND NEW CURB LINE TO BE CONSTRUCTED DURING THIS PHASE. ACCESS TO EXISTING TACO BELL TO BE MAINTAINED OFF OF HANCOCK AVENUE. CONTRACTOR TO MAINTAIN SIDEWALK ACCESS THROUGH CONSTRUCTION PHASE FOR PEDESTRIANS.

PHASE 3.) CLOSURE OF SOUTHERNMOST EASTBOUND LANE ALONG BROADWAY BLVD. NEW CURB LINE AND SIDEWALK TO BE CONSTRUCTED DURING THIS PHASE. CONTRACTOR TO PROVIDE PEDESTRIAN DETOUR ROUTE AS SHOWN IN THE PLANS.

PHASE 4.) MOBILE OPERATION. CONTRACTOR TO INSTALL PERMANENT PAVEMENT MARKINGS DURING THIS PHASE. CONTRACTOR TO MAINTAIN ACCESS ALONG BROADWAY BLVD DURING THIS PHASE.

N

0' 15' 30' 60'
SCALE IN FEET

C:\Temp\AcPublish_17792\F_TC_02501245.dwg
DATE: Jul 25, 2025 10:12am USER: jstretz

olsson
7301 West 133rd Street
Suite 200
Overland Park, KS 66213
olsson.com
TEL 913.381.1170
FAX 913.381.1174
Olsson - Engineering
Missouri COA #001592

STATE OF MISSOURI
JEREMY SCOTT STEETZ
NUMBER
PE-2017023856
PROFESSIONAL ENGINEER
7/25/2025

REV. NO.	DATE	DESCRIPTION	BY

REVISIONS

TRAFFIC CONTROL PLAN
CONSTRUCTION SEQUENCING

US HWY 50 (BROADWAY BLVD)
PUBLIC IMPROVEMENTS

2025

SEDALIA, MO

drawn by: SEL
designed by: JMP
project no.: 025-01245
date: 07/25/2025

C:\Temp\AcPublish_17792\F_TC_02501245.dwg
DATE: Jul 25, 2025 10:12am USER: jstretz

olsson

7301 West 133rd Street
Suite 200
Overland Park, KS 66213

olsson.com
TEL 913.381.1170
FAX 913.381.1174

Olsson - Engineering
Missouri COA #001592

STATE OF MISSOURI
JEREMY SCOTT STEETZ
NUMBER PE-2017023856
PROFESSIONAL ENGINEER
7/25/2025

REV. NO.	DATE	DESCRIPTION	BY

REVISIONS

TRAFFIC CONTROL PLAN
PHASE 1

US HWY 50 (BROADWAY BLVD)
PUBLIC IMPROVEMENTS

2025

SEDALIA, MO

drawn by: SEL
designed by: JMP
project no.: 025-01245
date: 07/25/2025

SHEET
24 of 33

LEGEND

- Phase 1 Work Area
- Type III Barricade
- Sign Symbol
- Channelizing Device
- Direction of Traffic

NOTES:

1) ALL TRAFFIC CONTROL SHALL FOLLOW CURRENT MODOT/MUTCD STANDARDS AND SPECIFICATIONS.

2) CONTRACTOR TO MAINTAIN SIDEWALK ACCESS ALONG THE NORTHSIDE OF BROADWAY BLVD DURING CONSTRUCTION.

N

0' 15' 30' 60'
SCALE IN FEET

C:\Temp\AcPublish_17792\F_TC_02501245.dwg
DATE: Jul 25, 2025 10:12am USER: jsteetz

olsson
7301 West 133rd Street
Suite 200
Overland Park, KS 66213
olsson.com
TEL 913.381.1170
FAX 913.381.1174
Olsson - Engineering
Missouri COA #001592

STATE OF MISSOURI
JEREMY SCOTT STEETZ
NUMBER
PE-2017023856
PROFESSIONAL ENGINEER
7/25/2025

REV. NO.	DATE	DESCRIPTION	BY

REVISIONS

TRAFFIC CONTROL PLAN
PHASE 2

US HWY 50 (BROADWAY BLVD)
PUBLIC IMPROVEMENTS

SEDALIA, MO

2025

drawn by: SEL
designed by: JMP
project no.: 025-01245
date: 07/25/2025

LEGEND

- Phase 2 Work Area
- Type III Barricade
- Sign Symbol
- Channelizing Device
- Direction of Traffic

NOTES:

1) ALL TRAFFIC CONTROL SHALL FOLLOW CURRENT MODOT/MUTCD STANDARDS AND SPECIFICATIONS.
2) CONTRACTOR TO MAINTAIN SIDEWALK ACCESS ALONG THE NORTHSIDE OF BROADWAY BLVD DURING CONSTRUCTION.

0' 15' 30' 60'
SCALE IN FEET

olsson
7301 West 133rd Street
Suite 200
Overland Park, KS 66213
olsson.com
TEL 913.381.1170
FAX 913.381.1174
Olsson - Engineering
Missouri COA #001592

STATE OF MISSOURI
JEREMY SCOTT STEETZ
NUMBER PE-2017023856
PROFESSIONAL ENGINEER
7/25/2025

REV. NO.	DATE	DESCRIPTION	BY

REVISIONS

TRAFFIC CONTROL PLAN
PHASE 2

US HWY 50 (BROADWAY BLVD)
PUBLIC IMPROVEMENTS

SEDALIA, MO

2025

drawn by: SEL
designed by: JMP
project no.: 025-01245
date: 07/25/2025

SHEET
26 of 33

O:\Temp\AcPublish_17792\F_TC_02501245.dwg
DATE: Jul 25, 2025 10:13am USER: jsteetz

BREAKLINE A

BREAKLINE A

BREAKLINE B

NOTES:

1) ALL TRAFFIC CONTROL SHALL FOLLOW CURRENT MODOT/MUTCD STANDARDS AND SPECIFICATIONS.

BREAKLINE B

LEGEND

- Phase 3 Work Area
- Type III Barricade
- ADA Barricade
- Sign Symbol
- Channelizing Device
- Direction of Traffic

N

0' 15' 30' 60'
SCALE IN FEET

olsson

7301 West 133rd Street
Suite 200
Overland Park, KS 66213

olsson.com
TEL 913.381.1170
FAX 913.381.1174

Olsson - Engineering
Missouri COA #001592

STATE OF MISSOURI
JEREMY SCOTT STEETZ
NUMBER PE-2017023856
PROFESSIONAL ENGINEER
7/25/2025

REV. NO.	DATE	DESCRIPTION	BY

REVISIONS

TRAFFIC CONTROL PLAN
PHASE 3

US HWY 50 (BROADWAY BLVD)
PUBLIC IMPROVEMENTS

2025

SEDALIA, MO

drawn by: SEL
designed by: JMP
project no.: 025-01245
date: 07/25/2025

SHEET
27 of 33

O:\Temp\AcPublish_17792\F_TC_02501245.dwg
DATE: Jul 25, 2025 10:13am USER: jsteetz

LEGEND

- Phase 3 Work Area
- Type III Barricade
- Sign Symbol
- Channelizing Device
- Direction of Traffic

NOTES:

1) ALL TRAFFIC CONTROL SHALL FOLLOW CURRENT MODOT/MUTCD STANDARDS AND SPECIFICATIONS.

N

0' 15' 30' 60'
SCALE IN FEET

olsson
7301 West 133rd Street
Suite 200
Overland Park, KS 66213
olsson.com
TEL 913.381.1170
FAX 913.381.1174
Olsson - Engineering
Missouri COA #001592

STATE OF MISSOURI
JEREMY SCOTT STEETZ
NUMBER
PE-2017023856
PROFESSIONAL ENGINEER
7/25/2025

REV. NO.	DATE	DESCRIPTION	BY

REVISIONS

TRAFFIC CONTROL PLAN
PHASE 3

US HWY 50 (BROADWAY BLVD)
PUBLIC IMPROVEMENTS

SEDALIA, MO

2025

drawn by: SEL
designed by: JMP
project no.: 025-01245
date: 07/25/2025

SHEET
28 of 33

C:\Temp\AcPublish_17792\F_TC_02501245.dwg
DATE: Jul 25, 2025 10:13am USER: jsteetz

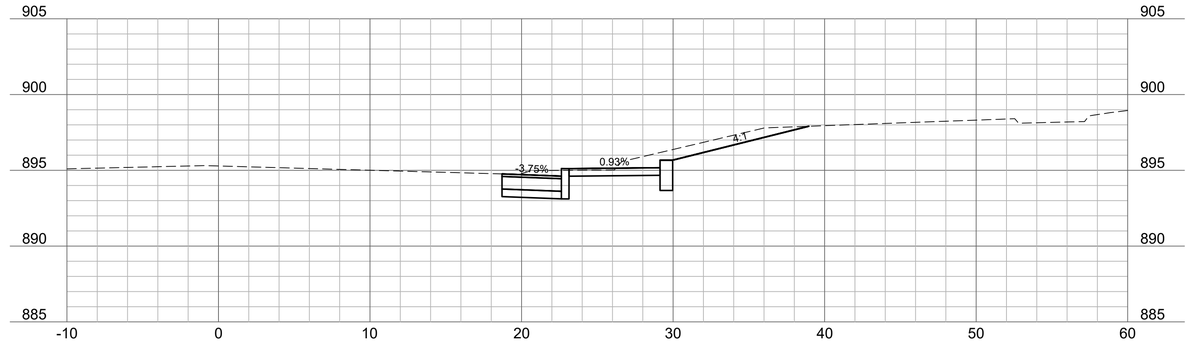

12+25

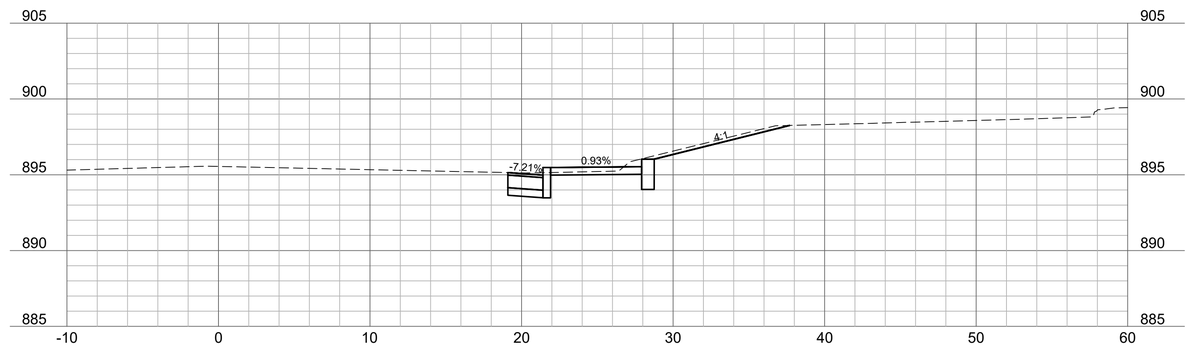

12+00

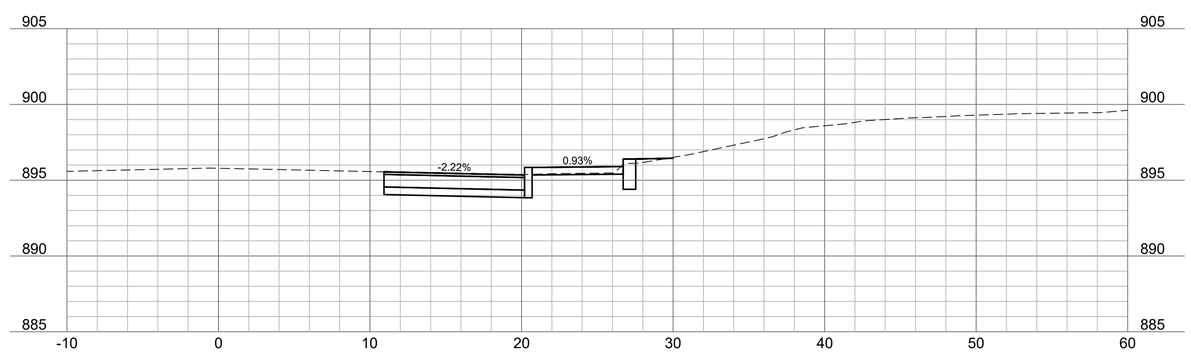

11+75

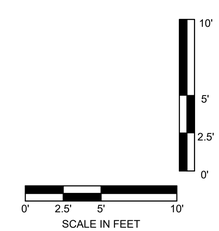

olsson

7301 West 133rd Street
Suite 200
Overland Park, KS 66213

olsson.com
TEL 913.381.1170
FAX 913.381.1174

Olsson - Engineering
Missouri COA #001592

STATE OF MISSOURI
REO A. BRENNEY GATES
NUMBER PE-2010019516
REGISTERED PROFESSIONAL ENGINEER
07/25/2025

REV. NO.	DATE	DESCRIPTION	BY

REVISIONS

CROSS SECTIONS
BROADWAY BLVD.

US HWY 50 (BROADWAY BLVD.)
PUBLIC IMPROVEMENTS

SEDALIA, MISSOURI

2025

drawn by: DAC
designed by: DAC
project no.: 025-01245
date: 07.25.2025

F:\2025\01001-01500\025-01245\40-Design\AutoCAD\Final Plans\Sheets\CROSS SECTIONS\T_XSC01_01245.dwg
DATE: Jul 25, 2025 9:15pm USER: dcove

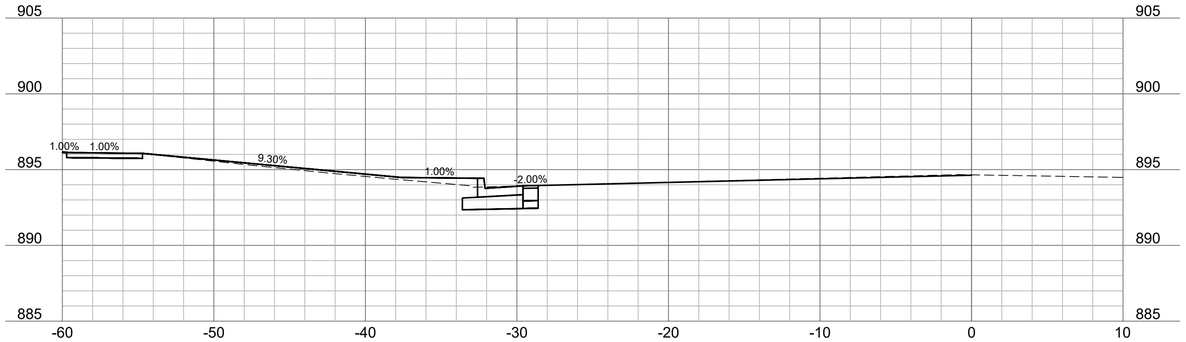

13+00

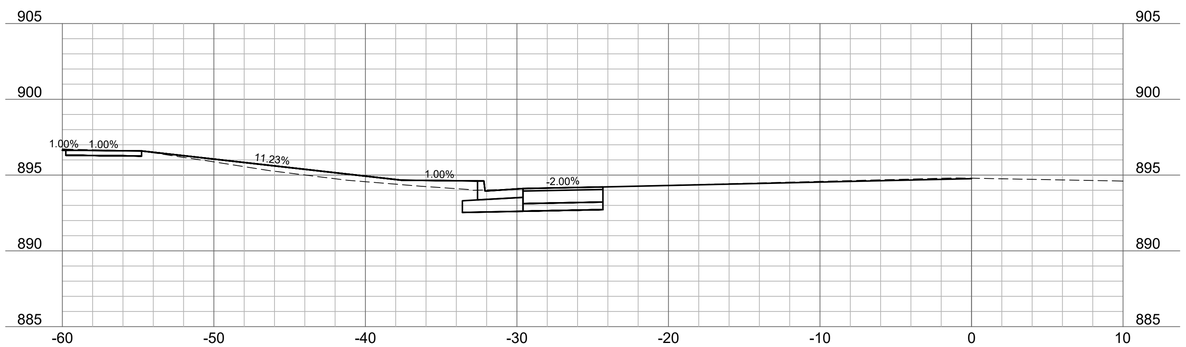

12+75

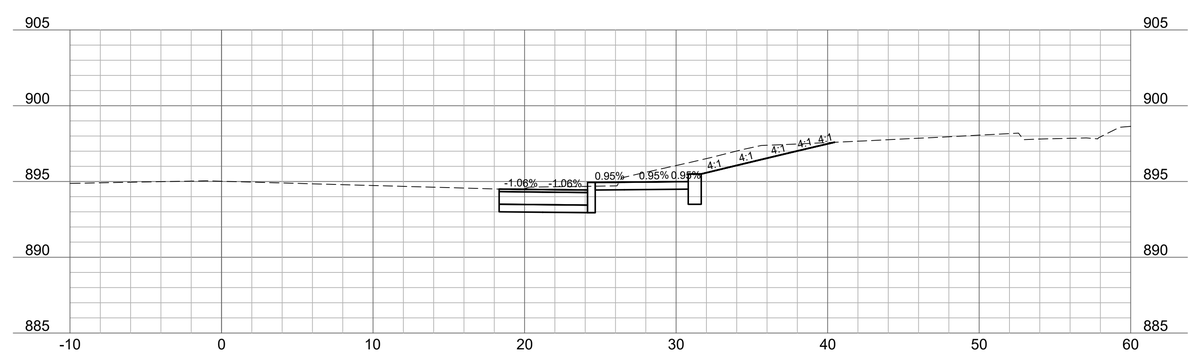

12+50

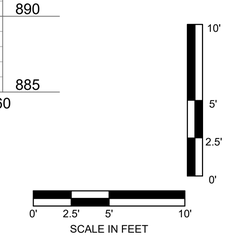

F:\2025\01001-01500\025-01245\40-Design\AutoCAD\Final Plans\Sheets\CROSS SECTIONS\T_XSC01_01245.dwg
DATE: Jul 25, 2025 9:15pm USER: dcove

olsson

7301 West 133rd Street
Suite 200
Overland Park, KS 66213

olsson.com
TEL 913.381.1170
FAX 913.381.1174

Olsson - Engineering
Missouri COA #001592

STATE OF MISSOURI
REO A. BRENNEY BATTS
NUMBER PE-2010019516
REGISTERED PROFESSIONAL ENGINEER
07/25/2025

REV. NO.	DATE	DESCRIPTION	BY

REVISIONS

CROSS SECTIONS
BROADWAY BLVD.

US HWY 50 (BROADWAY BLVD.)
PUBLIC IMPROVEMENTS

2025

SEDALIA, MISSOURI

drawn by: DAC
designed by: DAC
project no.: 025-01245
date: 07.25.2025

SHEET
30 of 33

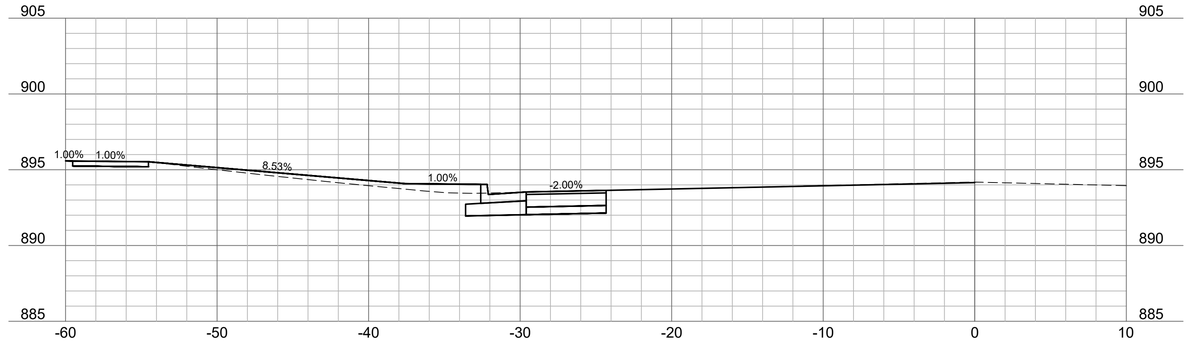

13+75

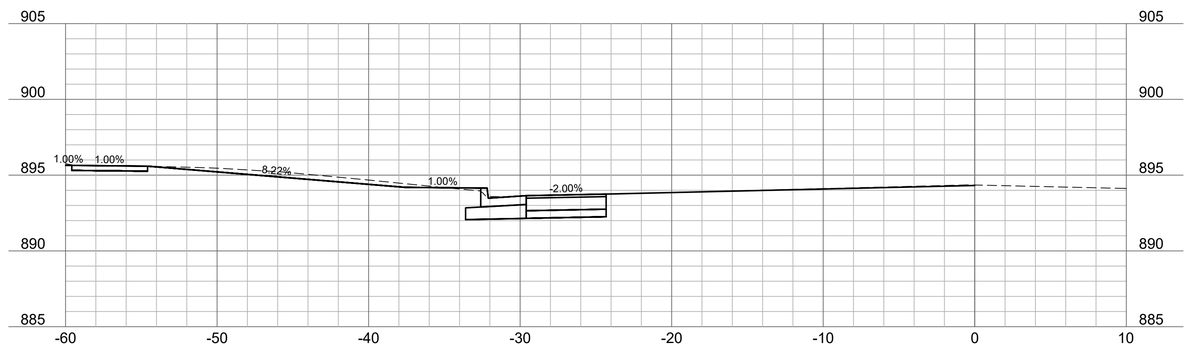

13+50

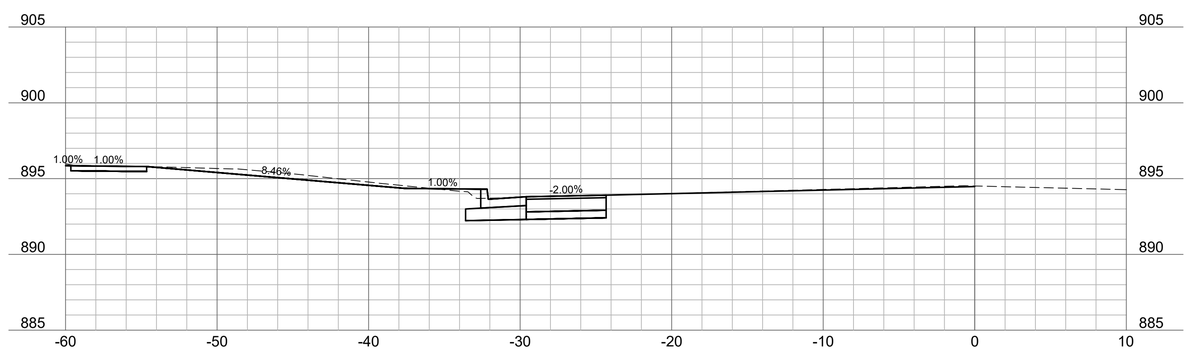

13+25

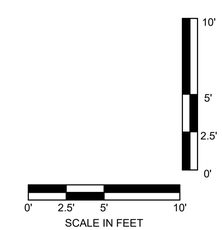

olsson

7301 West 133rd Street
Suite 200
Overland Park, KS 66213

olsson.com
TEL 913.381.1170
FAX 913.381.1174

Olsson - Engineering
Missouri COA #001592

STATE OF MISSOURI
REO A. BRENNEY
NUMBER PE-2010019516
REGISTERED PROFESSIONAL ENGINEER
07/25/2025

REV. NO.	DATE	DESCRIPTION	BY

REVISIONS

CROSS SECTIONS
BROADWAY BLVD.

US HWY 50 (BROADWAY BLVD.)
PUBLIC IMPROVEMENTS

SEDALIA, MISSOURI

2025

drawn by: DAC
designed by: DAC
project no.: 025-01245
date: 07.25.2025

SHEET
31 of 33

F:\2025\01001-01500\025-01245\40-Design\AutoCAD\Final Plans\Sheets\CROSS SECTIONS\ST_XSC01_01245.dwg
DATE: Jul 25, 2025 9:15pm USER: dcove

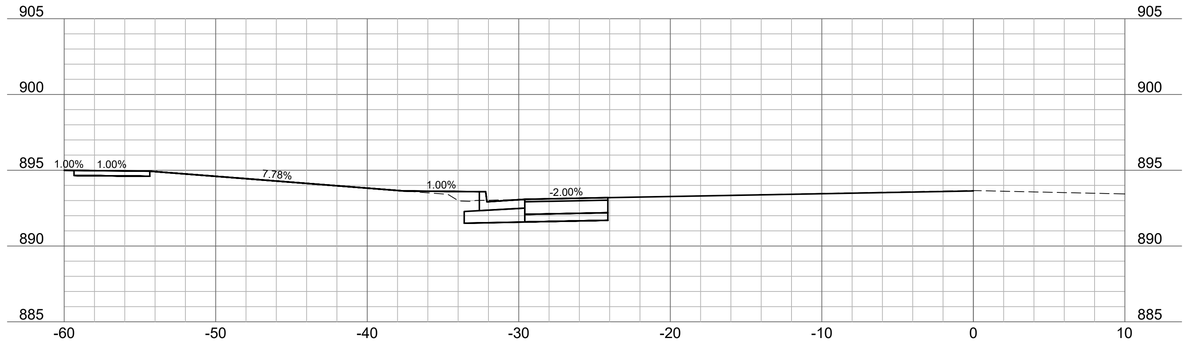

14+50

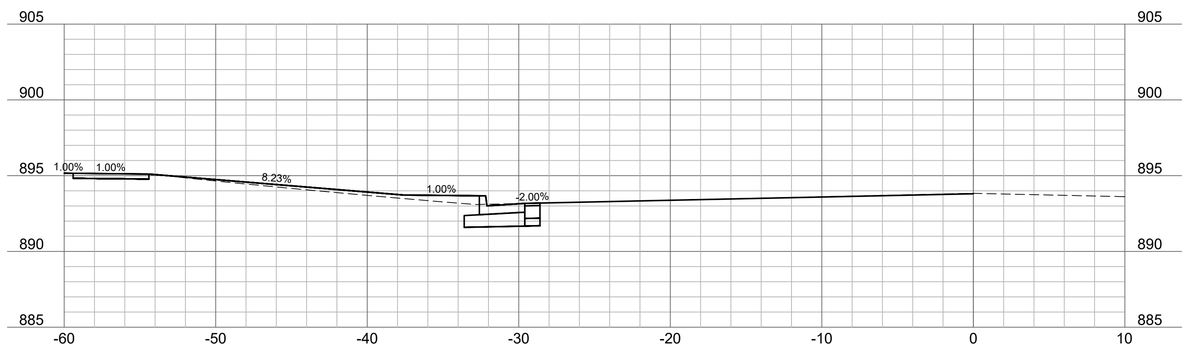

14+25

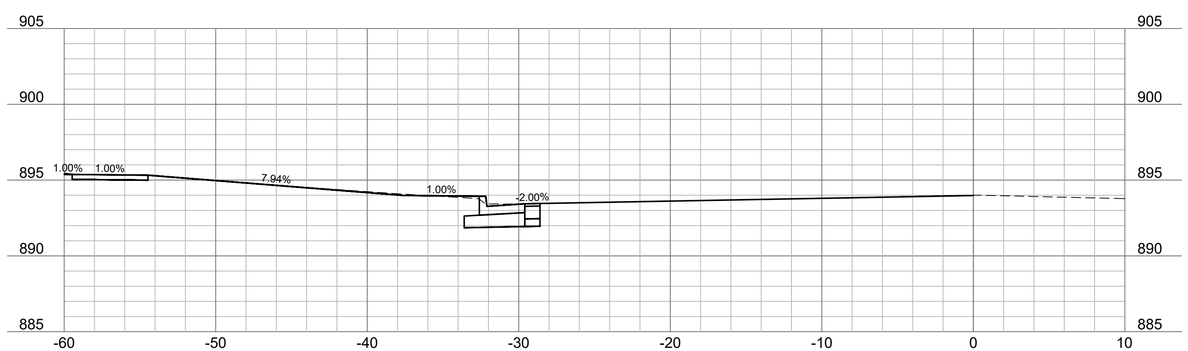

14+00

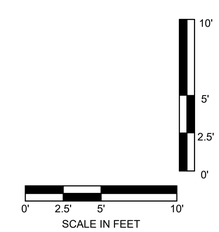

olsson

7301 West 133rd Street
Suite 200
Overland Park, KS 66213

olsson.com
TEL 913.381.1170
FAX 913.381.1174

Olsson - Engineering
Missouri COA #001592

STATE OF MISSOURI
REO A. BRENNEY
NUMBER PE-2010019516
REGISTERED PROFESSIONAL ENGINEER
07/25/2025

REV. NO.	DATE	DESCRIPTION	BY

REVISIONS

CROSS SECTIONS
BROADWAY BLVD.

US HWY 50 (BROADWAY BLVD.)
PUBLIC IMPROVEMENTS

SEDALIA, MISSOURI

2025

drawn by: DAC
designed by: DAC
project no.: 025-01245
date: 07.25.2025

SHEET
32 of 33

F:\2025\01001-01500\025-01245\40-Design\AutoCAD\Final Plans\Sheets\CROSS SECTIONS\T_XSC01_01245.dwg
DATE: Jul 25, 2025 9:15pm USER: dcove

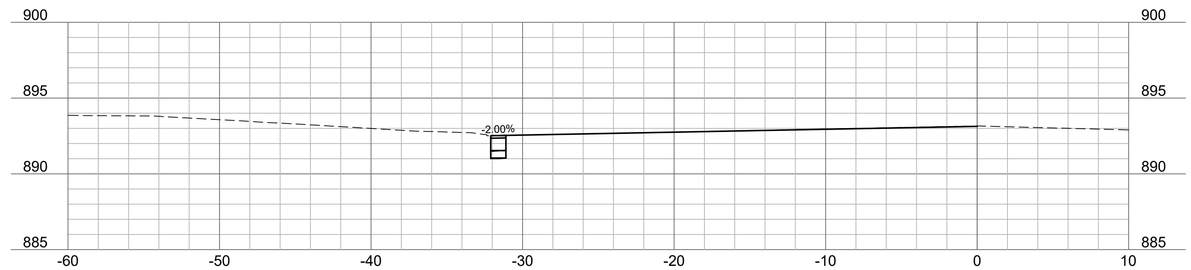

15+25

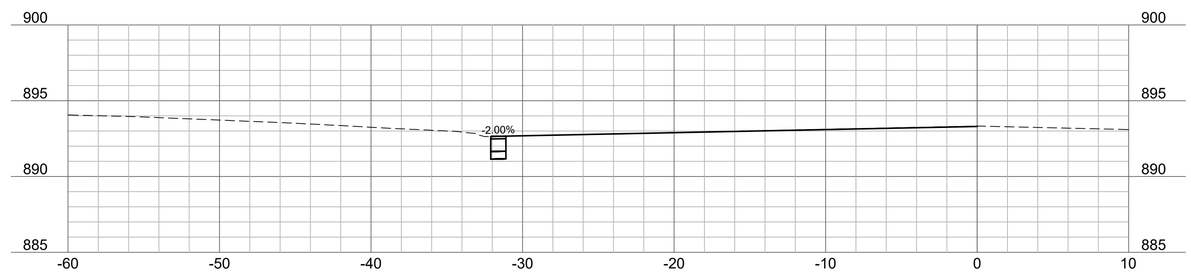

15+00

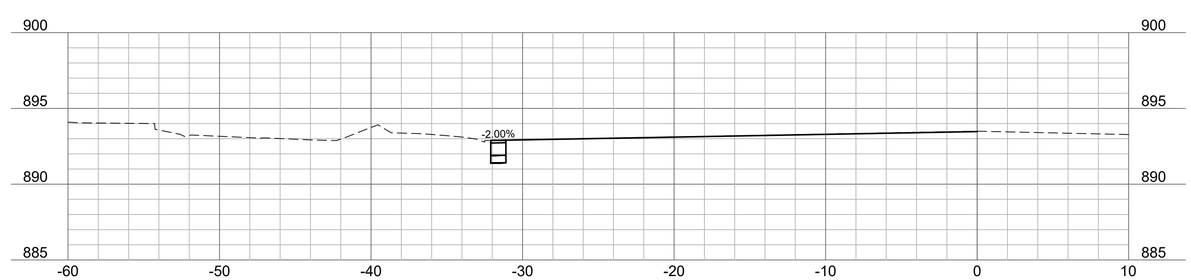

14+75

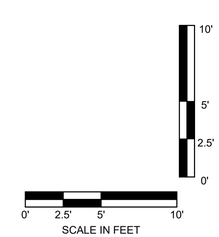

F:\2025\01001-01500\025-01245\40-Design\AutoCAD\Final Plans\Sheets\CROSS SECTIONS\T_XSC01_01245.dwg
DATE: Jul 25, 2025 9:15pm USER: dcove

olsson

7301 West 133rd Street
Suite 200
Overland Park, KS 66213

olsson.com
TEL 913.381.1170
FAX 913.381.1174

Olsson - Engineering
Missouri COA #001592

STATE OF MISSOURI
REO A. BRENNEY BATT
NUMBER PE-2010019516
REGISTERED PROFESSIONAL ENGINEER
07/25/2025

REV. NO.	DATE	DESCRIPTION	BY

REVISIONS

CROSS SECTIONS
BROADWAY BLVD.

US HWY 50 (BROADWAY BLVD.)
PUBLIC IMPROVEMENTS

SEDALIA, MISSOURI

2025

drawn by: DAC
designed by: DAC
project no.: 025-01245
date: 07.25.2025

SHEET
33 of 33